Performance of a Conical Inductive Pulsed Plasma Thruster at Multiple Cone Angles

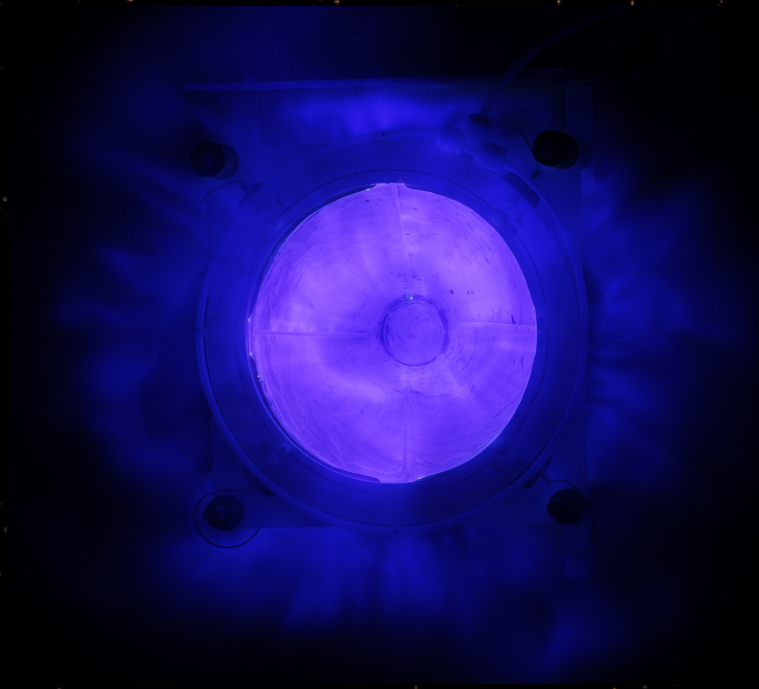

Ashley K. Hallock

YETISPACE

Kurt A. Polzin

Adam C. Kimberlin

NASA MSFC

Outline of Talk

- Inductive Pulsed Plasma Thrusters

Outline of Talk

- Inductive Pulsed Plasma Thrusters
  - Operation

Outline of Talk

- Inductive Pulsed Plasma Thrusters
  - Operation
  - What is the optimum coil geometry?

Outline of Talk

- Inductive Pulsed Plasma Thrusters
  - Operation
  - What is the optimum coil geometry?
- Model

Outline of Talk

- Inductive Pulsed Plasma Thrusters
  - Operation
  - What is the optimum coil geometry?
- Model
- Experiment

Outline of Talk

- Inductive Pulsed Plasma Thrusters
  - Operation
  - What is the optimum coil geometry?
- Model
- Experiment
- Experimental Results

Outline of Talk

- Inductive Pulsed Plasma Thrusters
  - Operation
  - What is the optimum coil geometry?
- Model
- Experiment
- Experimental Results
  - Impulse Measurements, Time-integrated Photographs, Time-resolved Video

Outline of Talk

- Inductive Pulsed Plasma Thrusters
  - Operation
  - What is the optimum coil geometry?
- Model
- Experiment
- Experimental Results
  - Impulse Measurements, Time-integrated Photographs, Time-resolved Video
  - Thrust Measurements, Video

Outline of Talk

- Inductive Pulsed Plasma Thrusters
  - Operation
  - What is the optimum coil geometry?
- Model
- Experiment
- Experimental Results
  - Impulse Measurements, Time-integrated Photographs, Time-resolved Video
  - Thrust Measurements, Video
- Discussion of Experimental Results

Outline of Talk

- Inductive Pulsed Plasma Thrusters
  - Operation
  - What is the optimum coil geometry?
- Model
- Experiment
- Experimental Results
  - Impulse Measurements, Time-integrated Photographs, Time-resolved Video
  - Thrust Measurements, Video
- Discussion of Experimental Results
- Conclusions

Inductive Pulsed Plasma Thrusters

Pulsed Inductive Thruster (PIT)

PIT Mark VI :

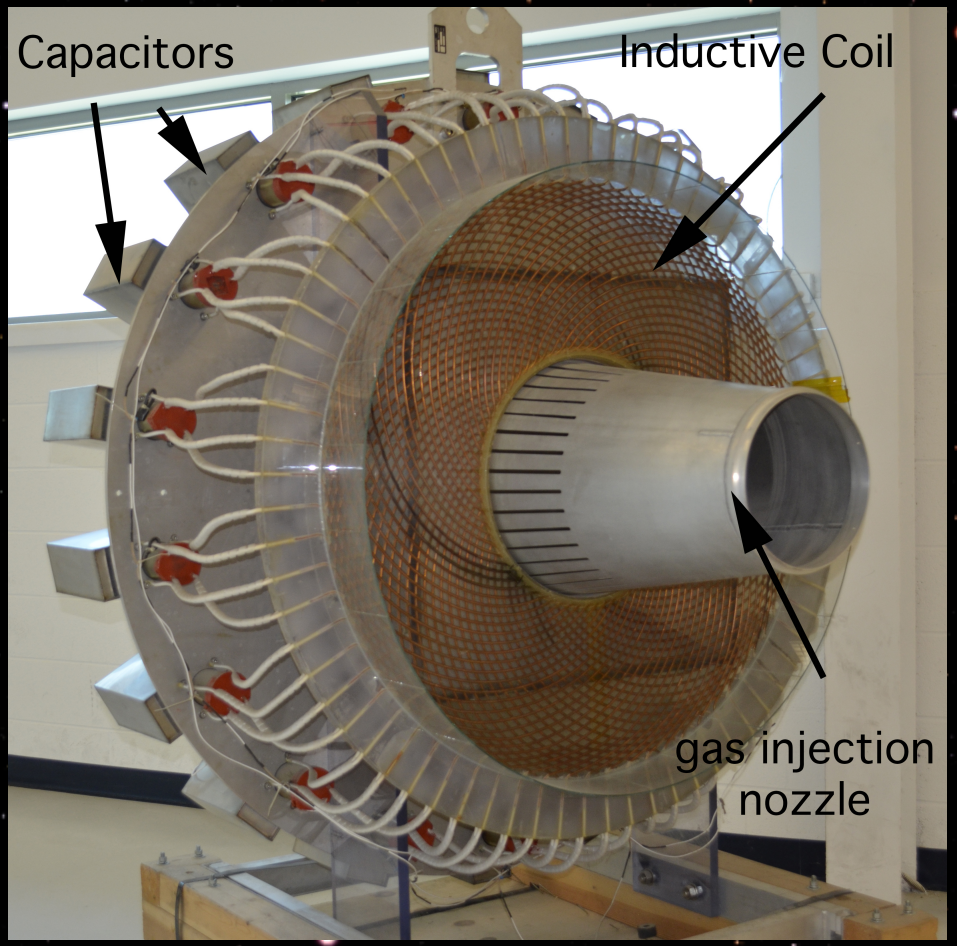

Inductive Pulsed Plasma Thruster Operation

Idealized thruster operation :

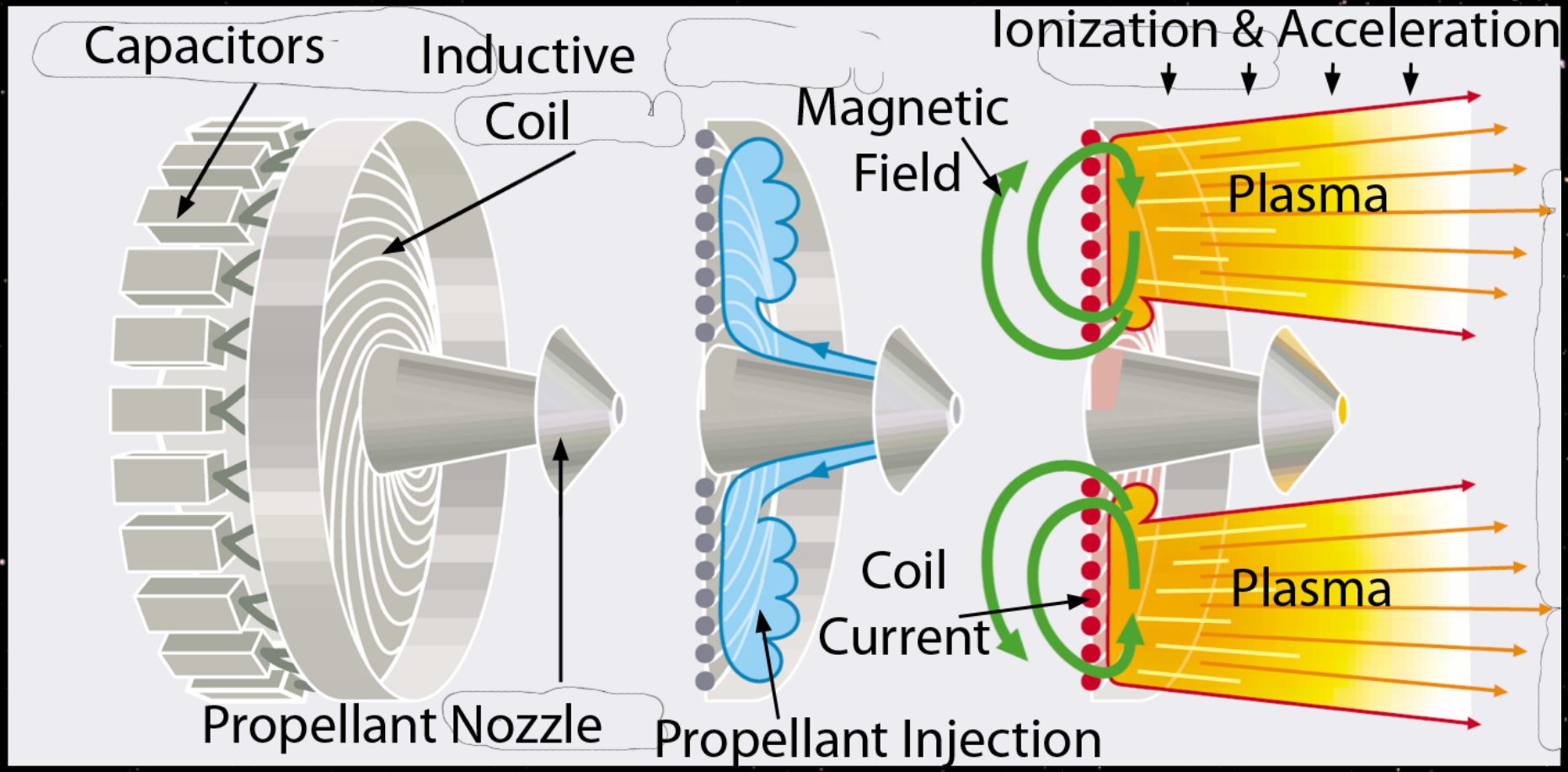

Question: What is the Optimum Coil Geometry?

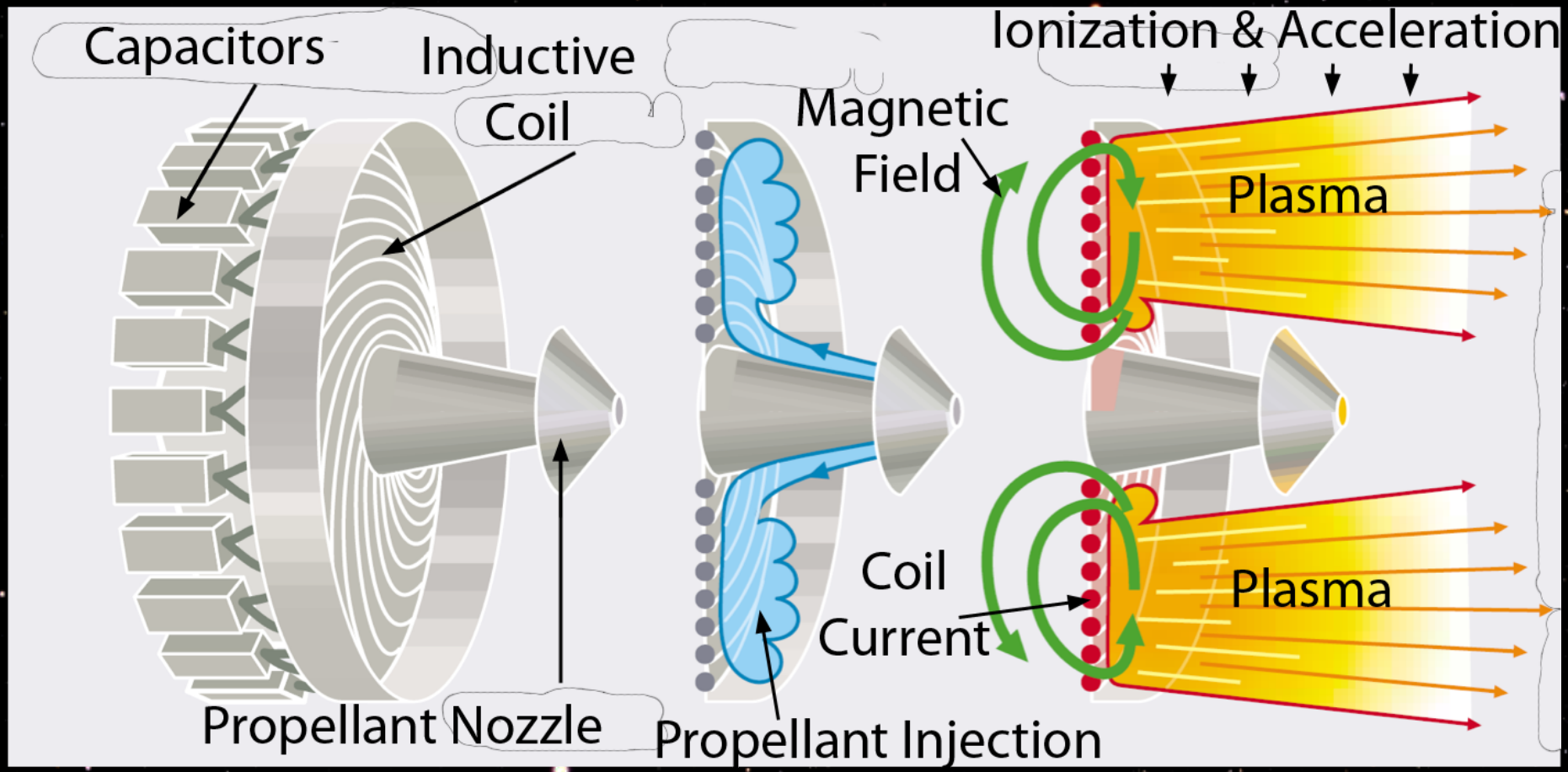

Question: What is the Optimum Coil Geometry?

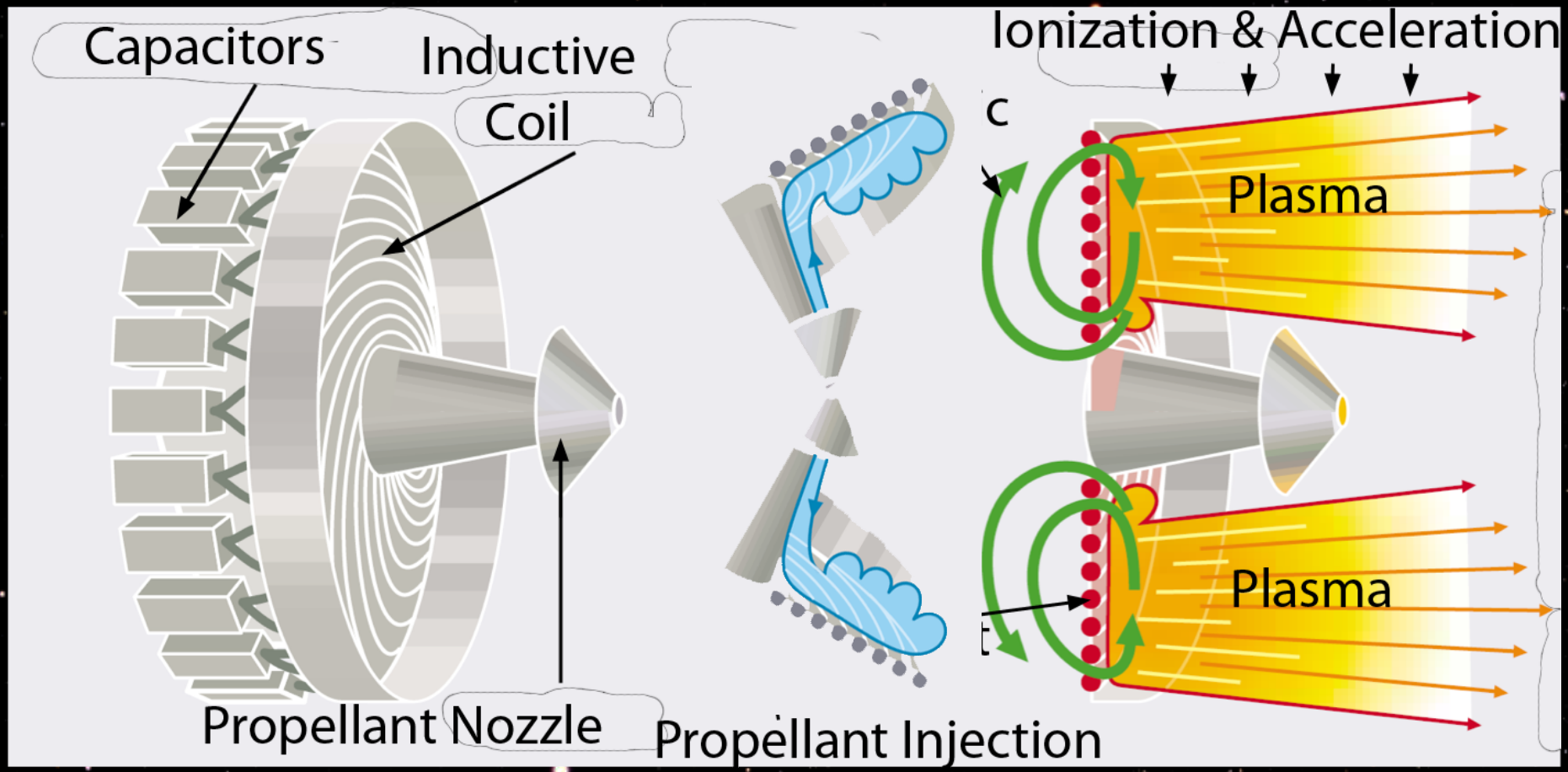

Question: What is the Optimum Coil Geometry?

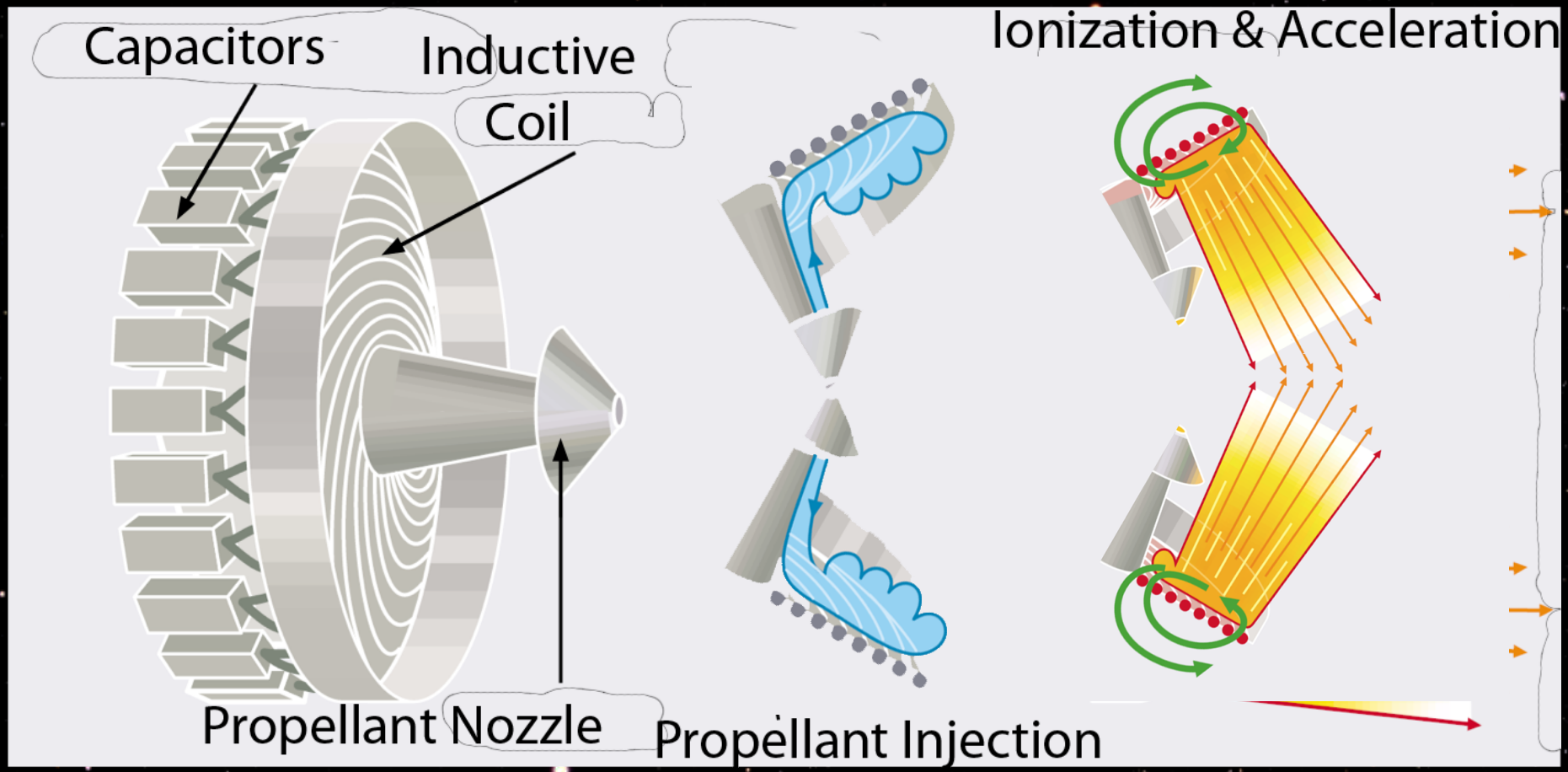

Circuit Model of Inductive Pulsed Plasma Acceleration

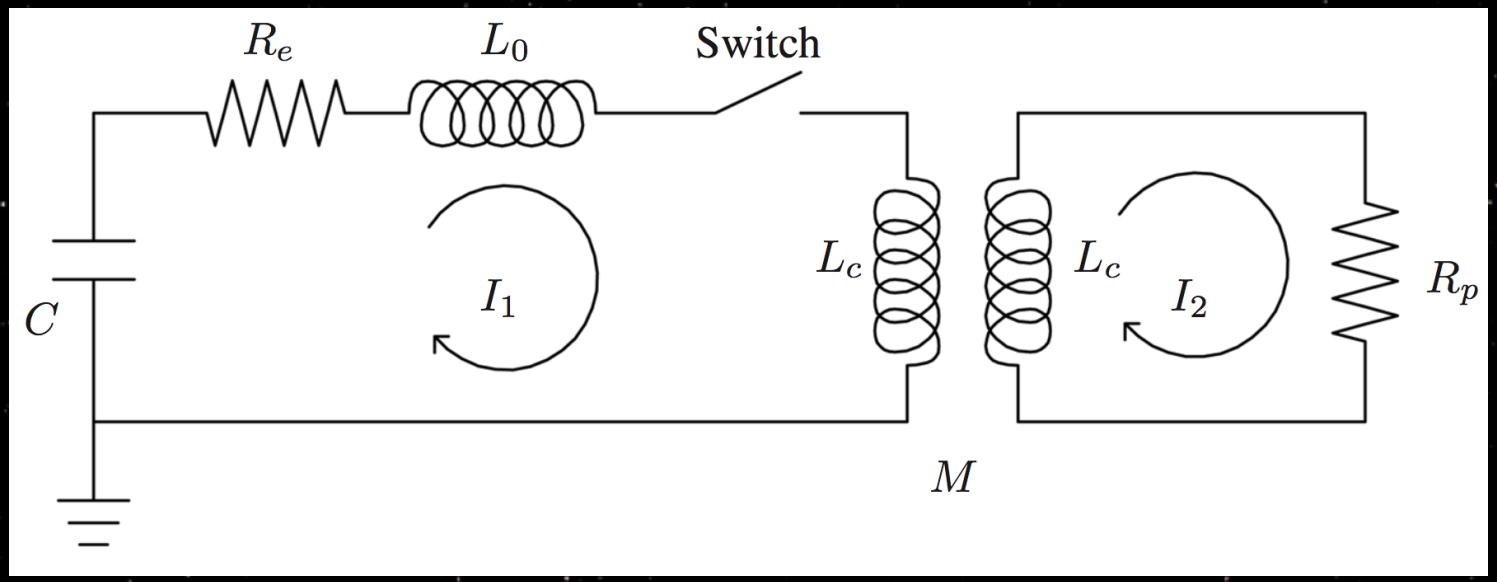

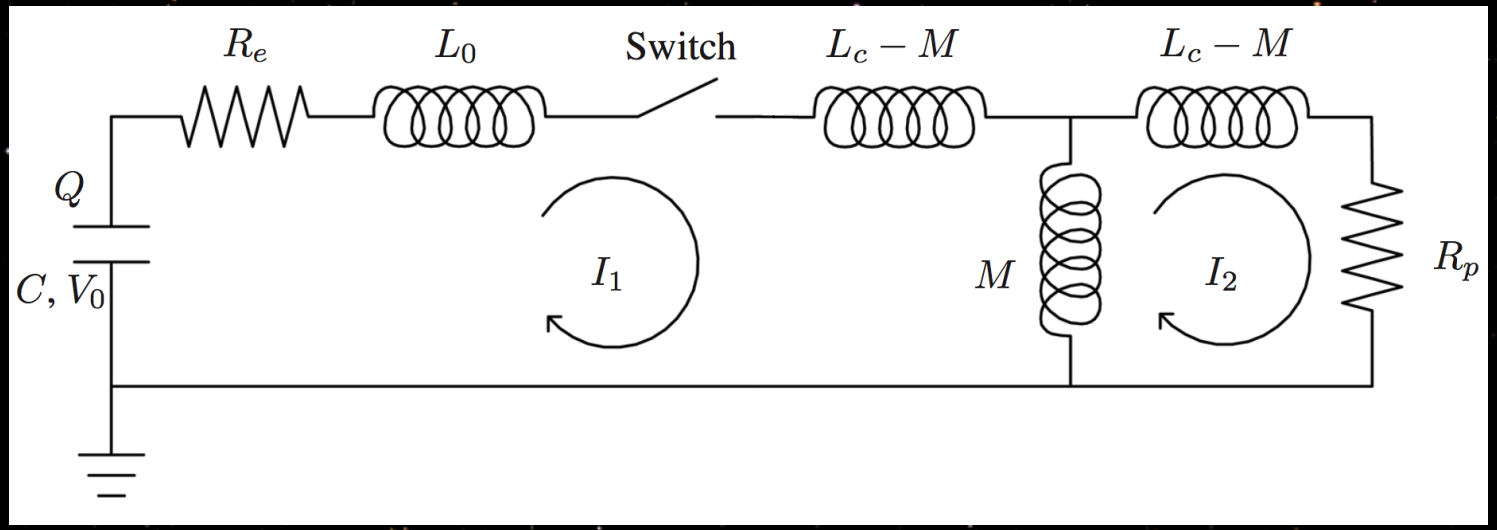

Circuit Model of Inductive Pulsed Plasma Acceleration

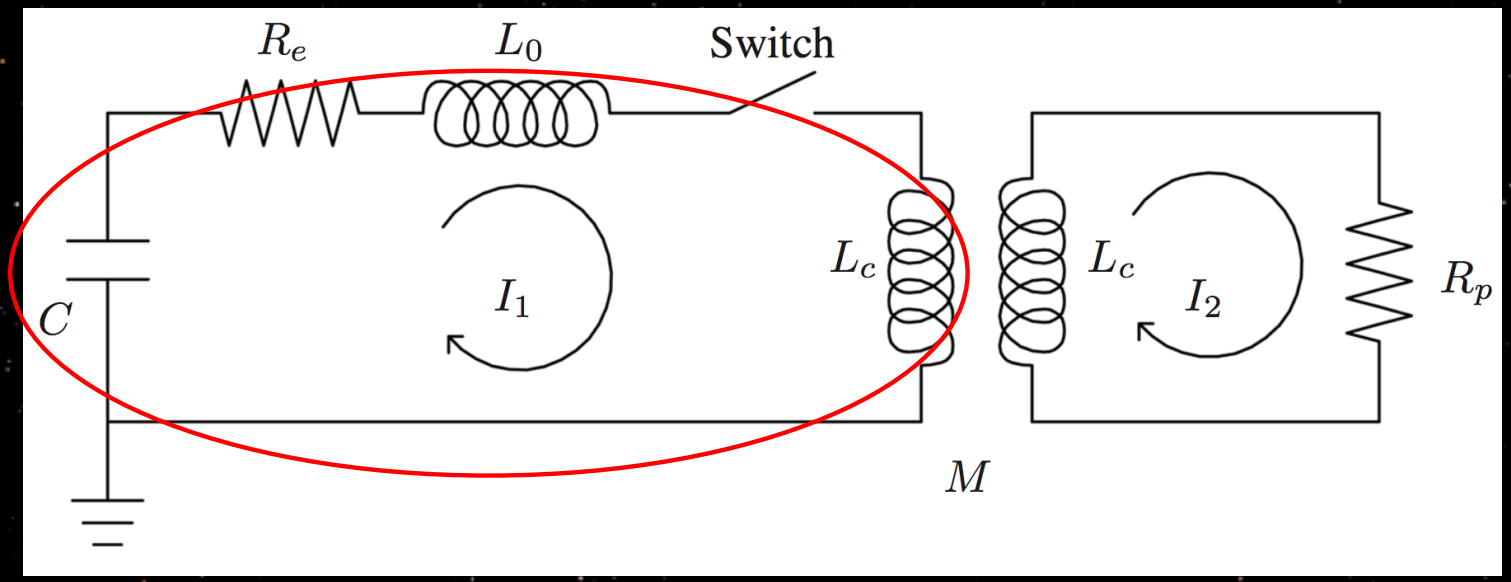

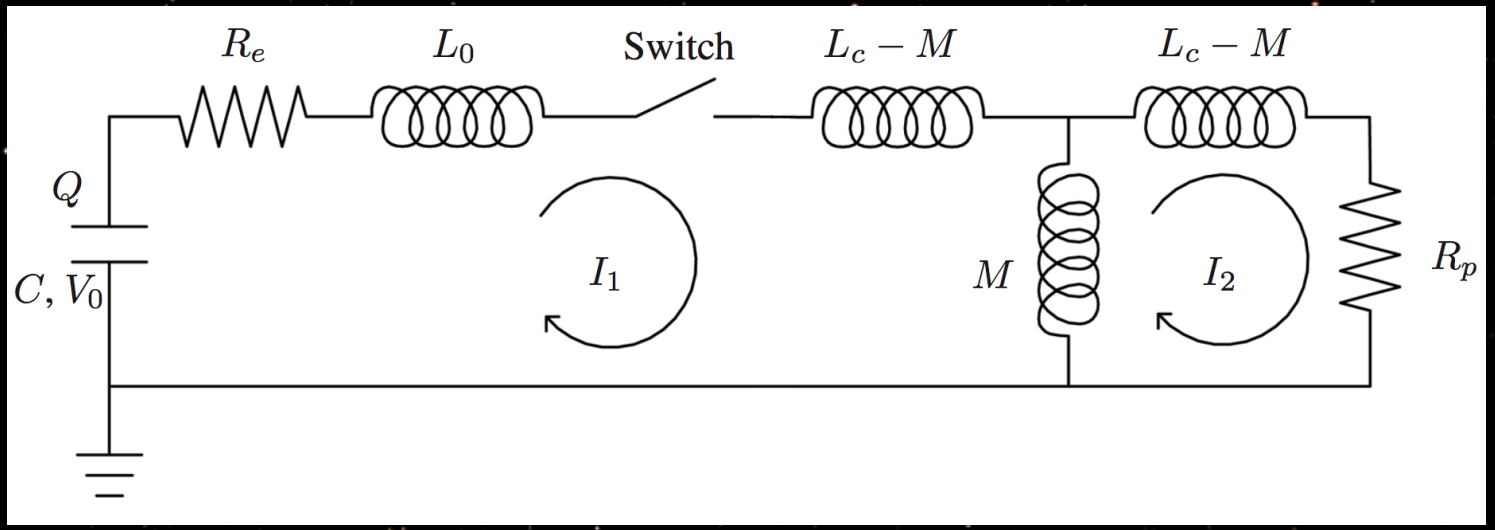

Circuit Model of Inductive Pulsed Plasma Acceleration

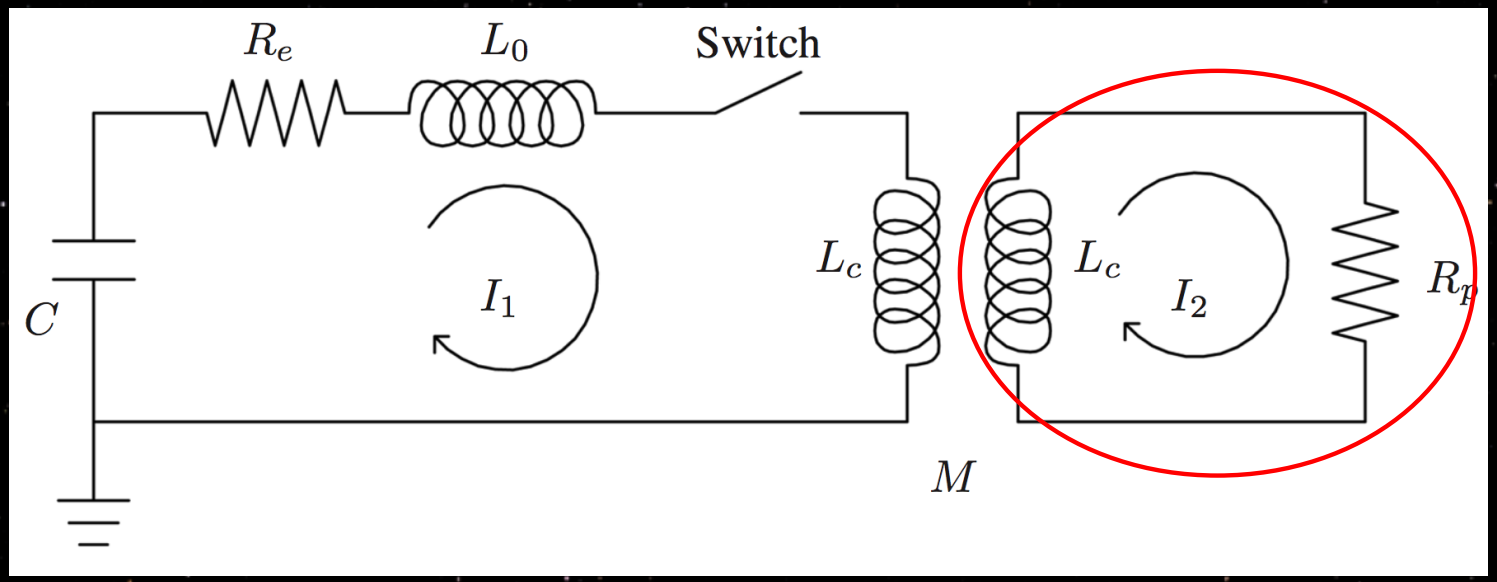

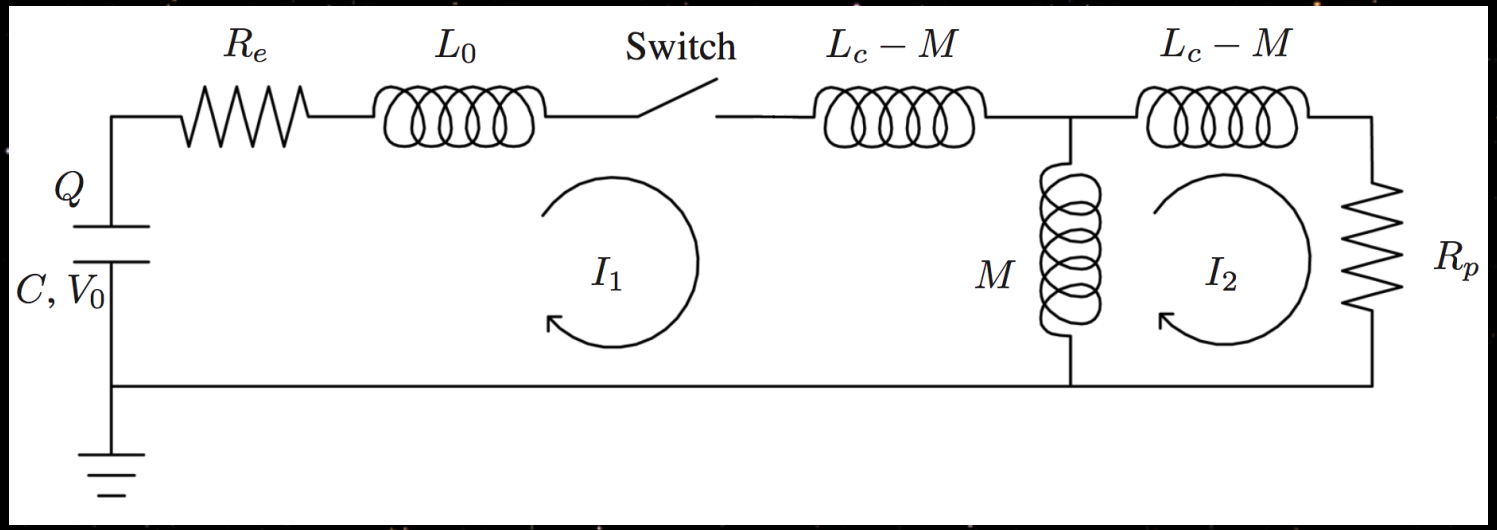

Circuit Model of Inductive Pulsed Plasma Acceleration

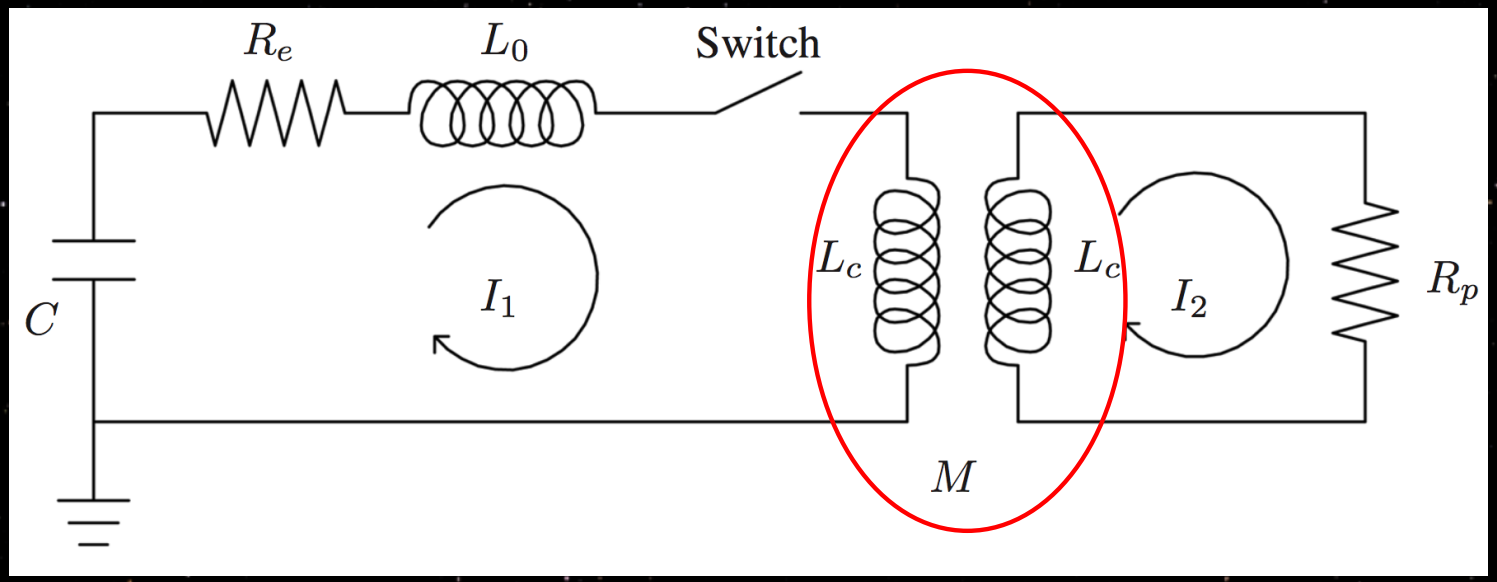

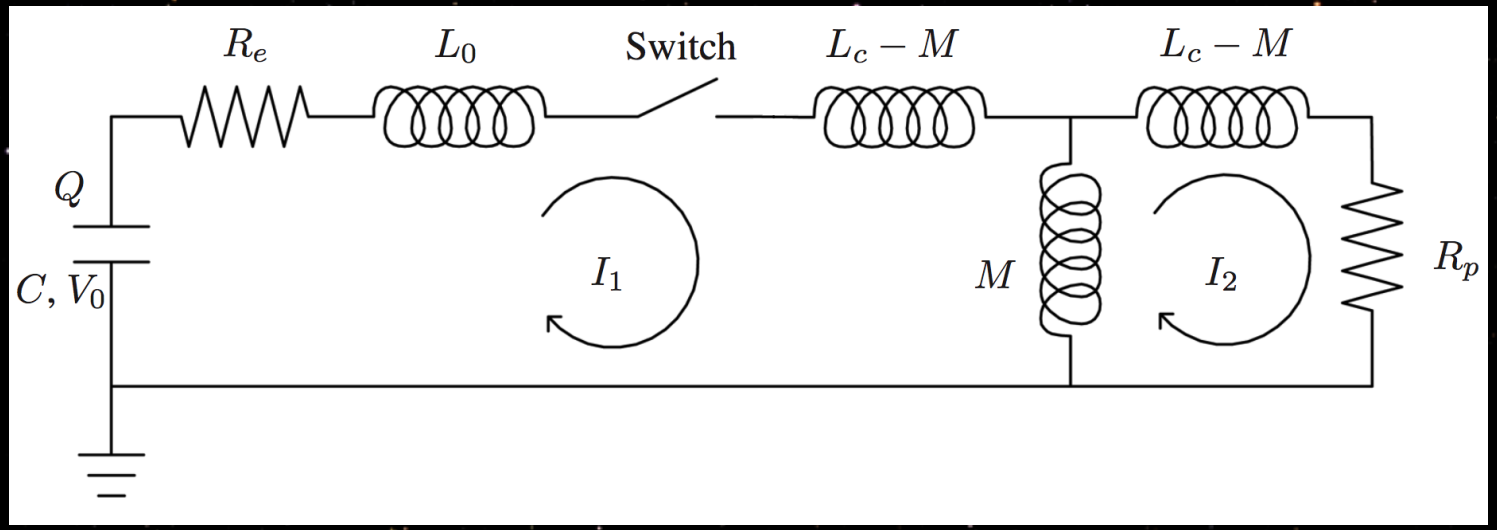

Radial Motion Accelerates Decoupling and Decreases Energy Transferred

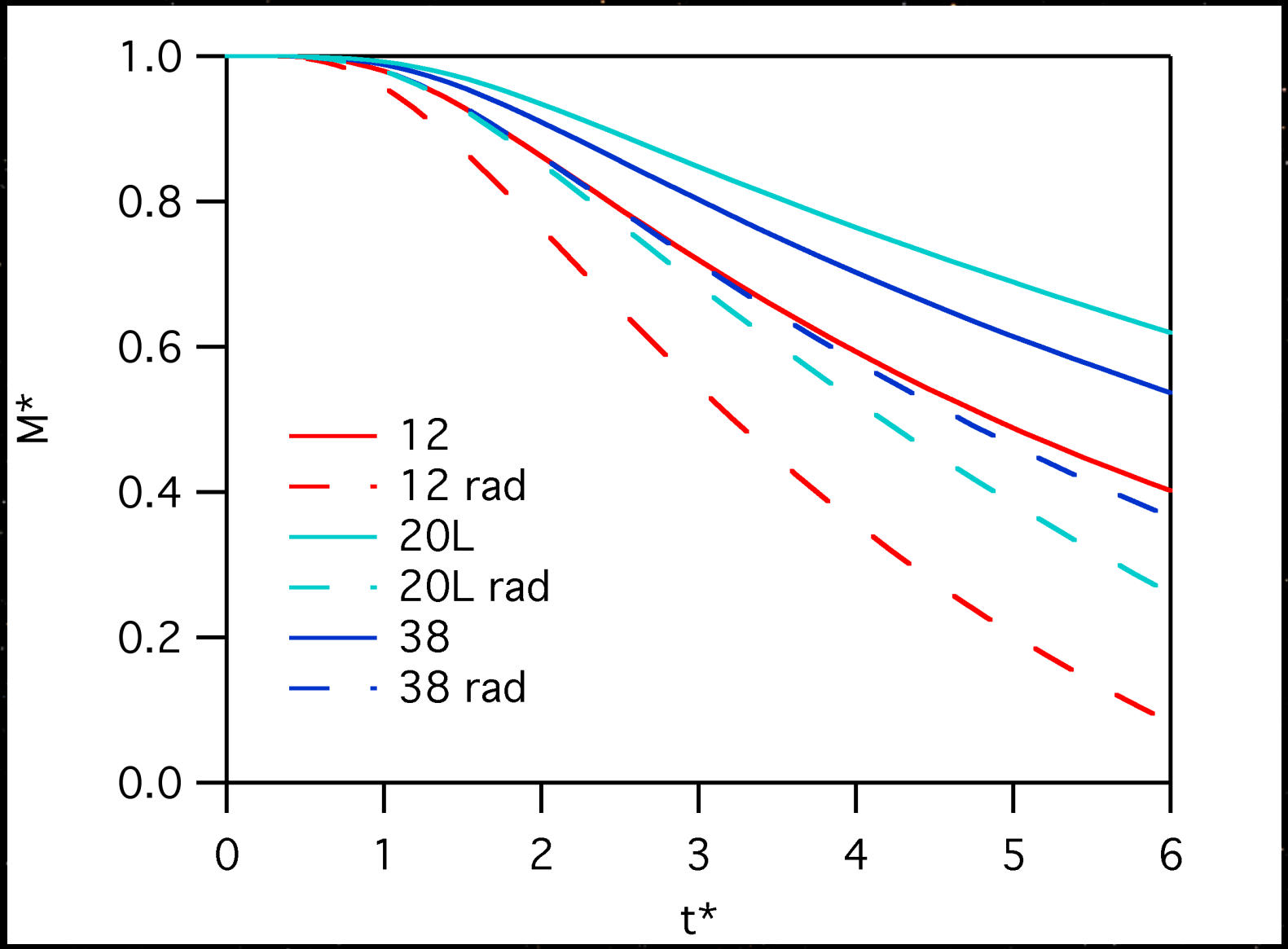

Experiment

Conical Inductive Coil for Increased Propellant Utilization Efficiency

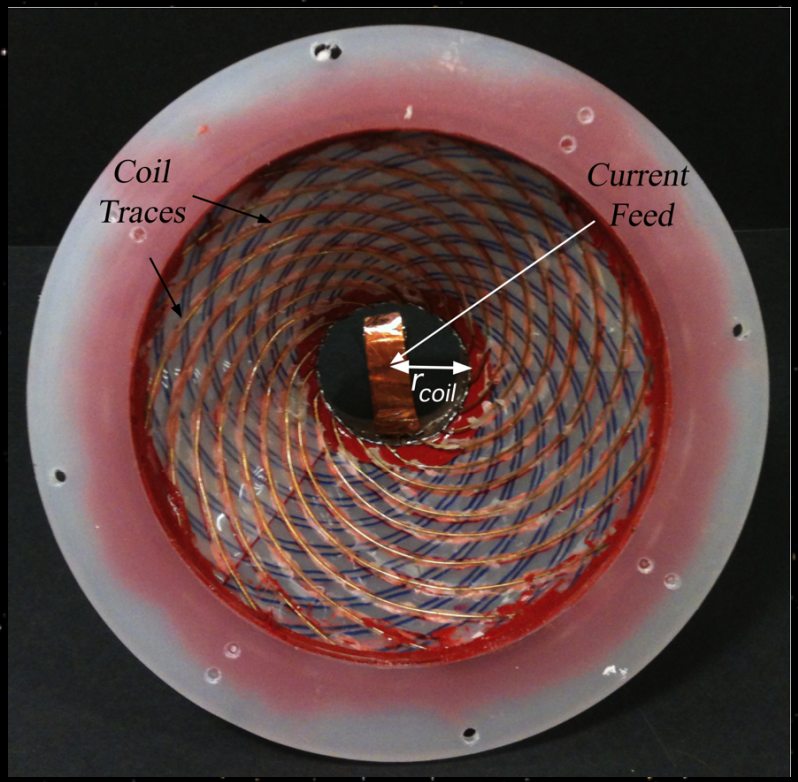

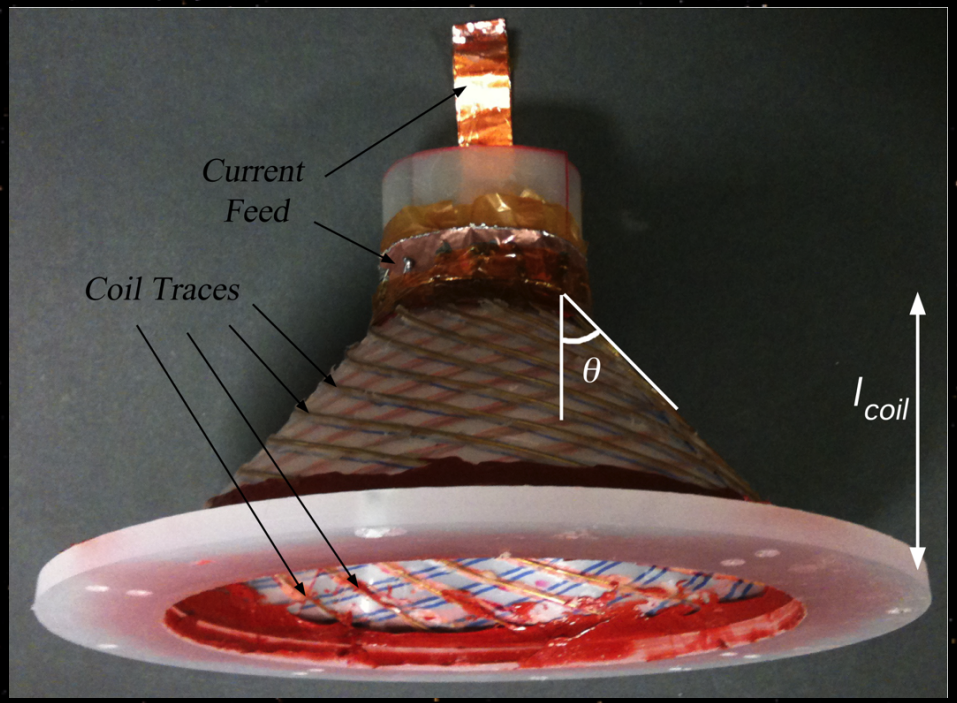

Thruster on Thrust Stand

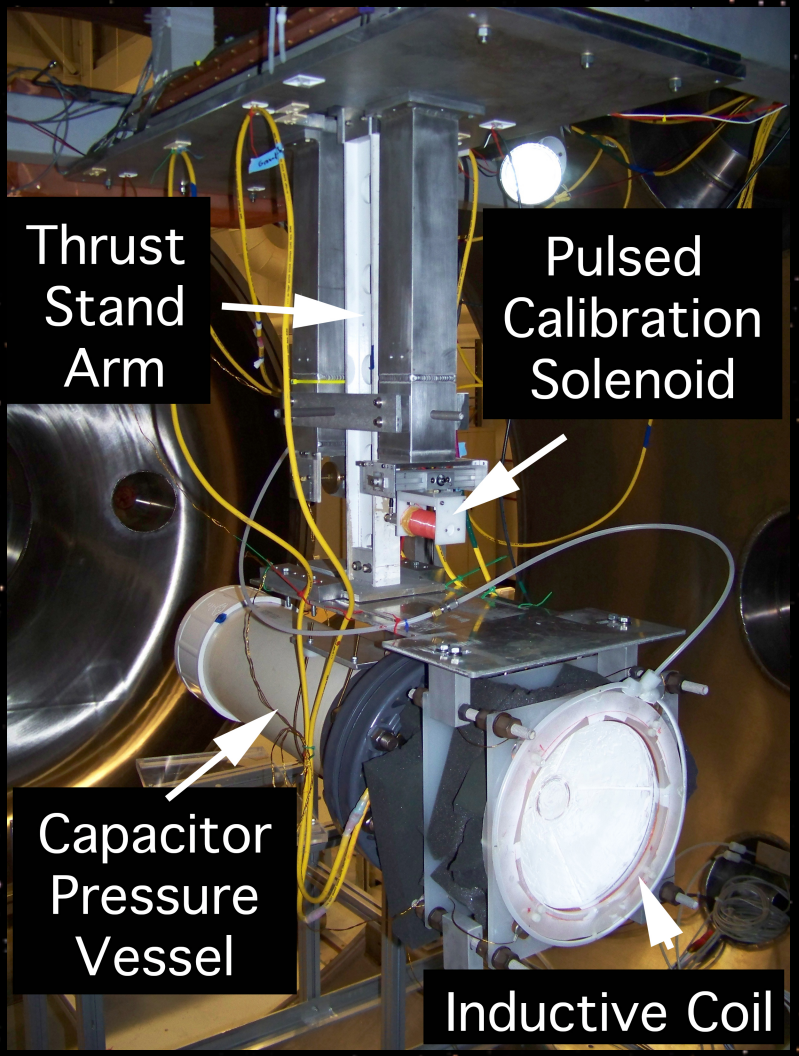

Double the Applied Voltage at Thruster

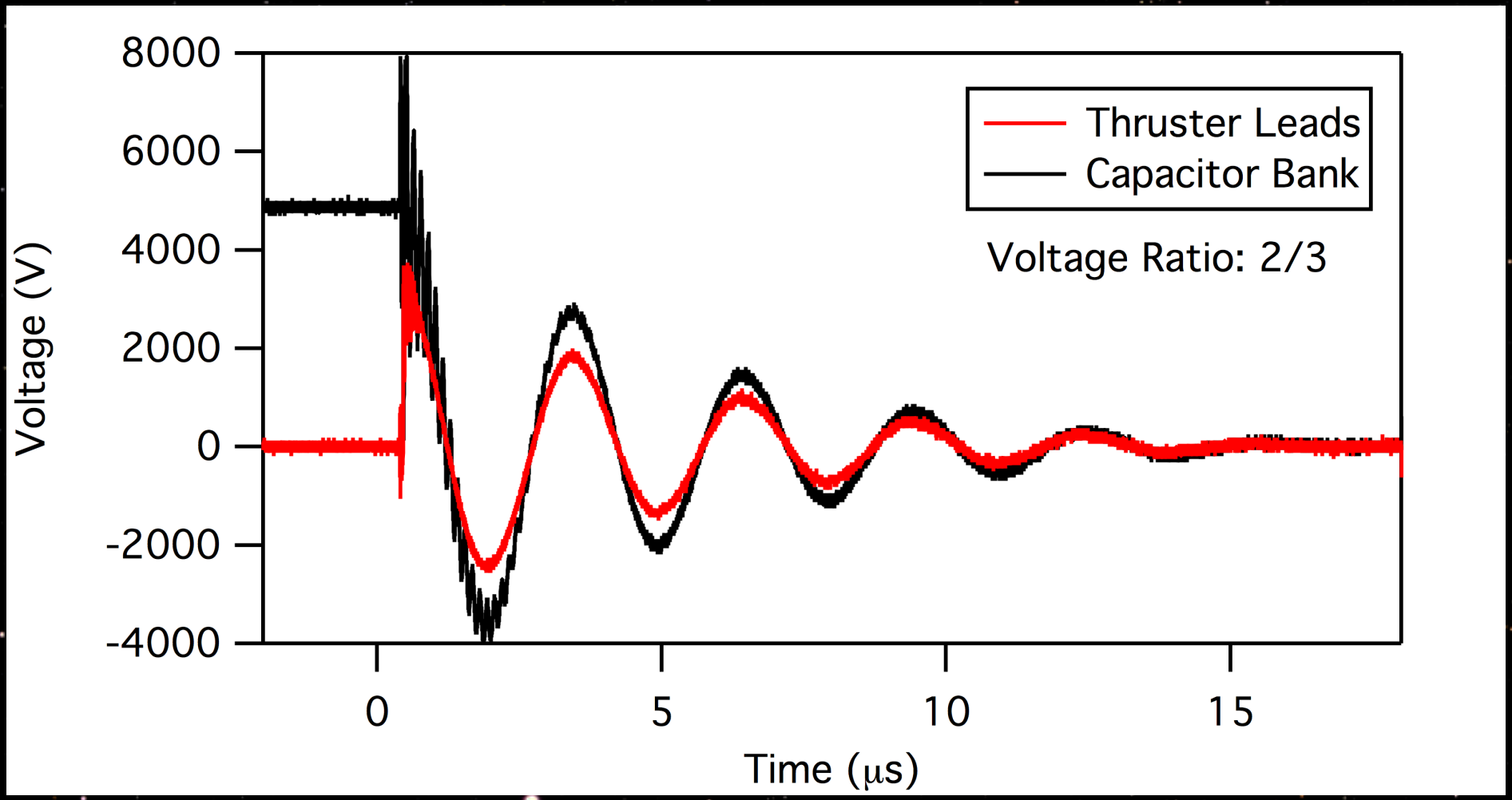

Experimental Results: Impulse Measurements

Impulse Bit Calculations for 20°, 38°, and 60°

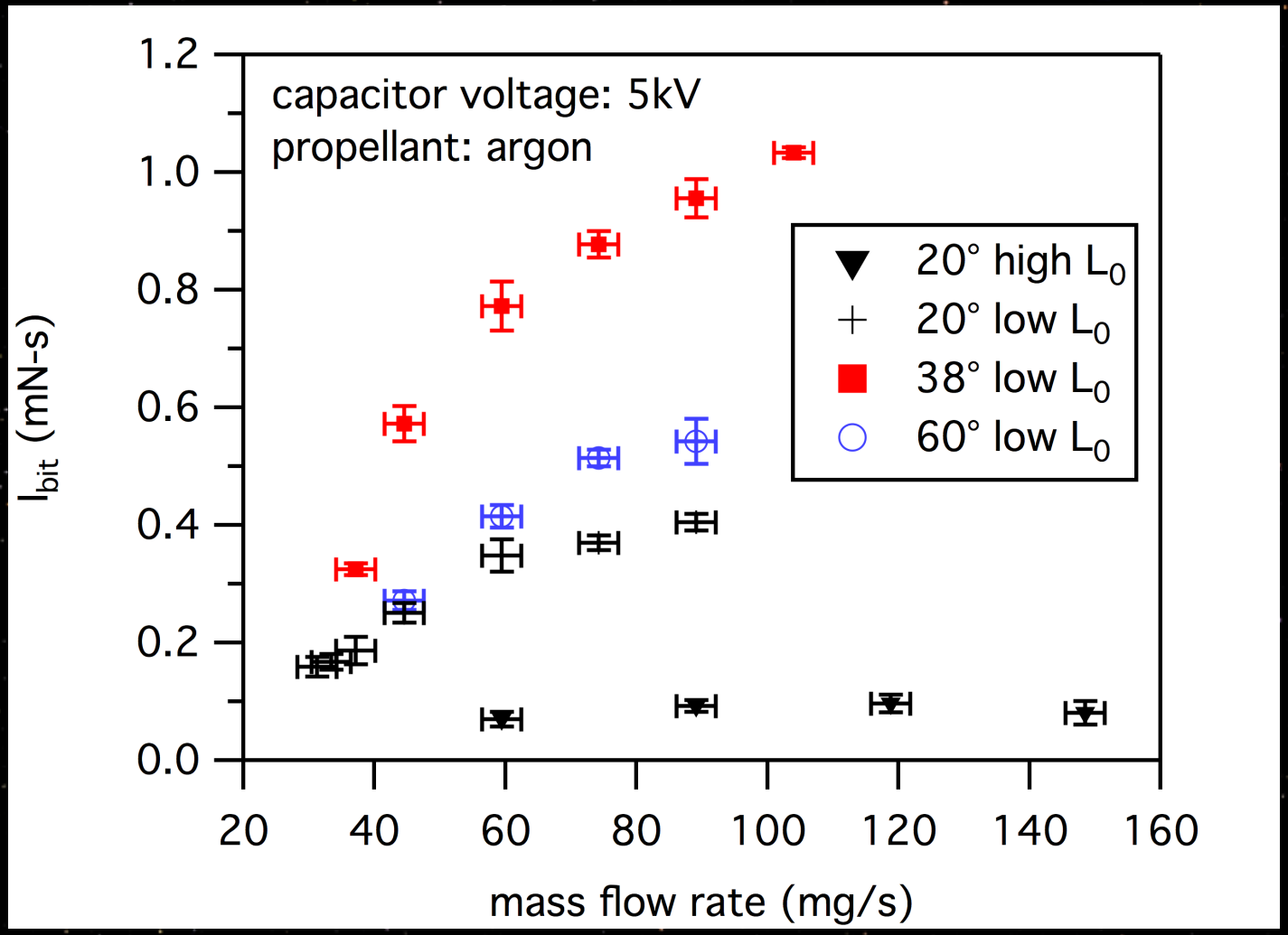

Impulse Bit Calculations for 38° operating at 3, 4, and 5 kV

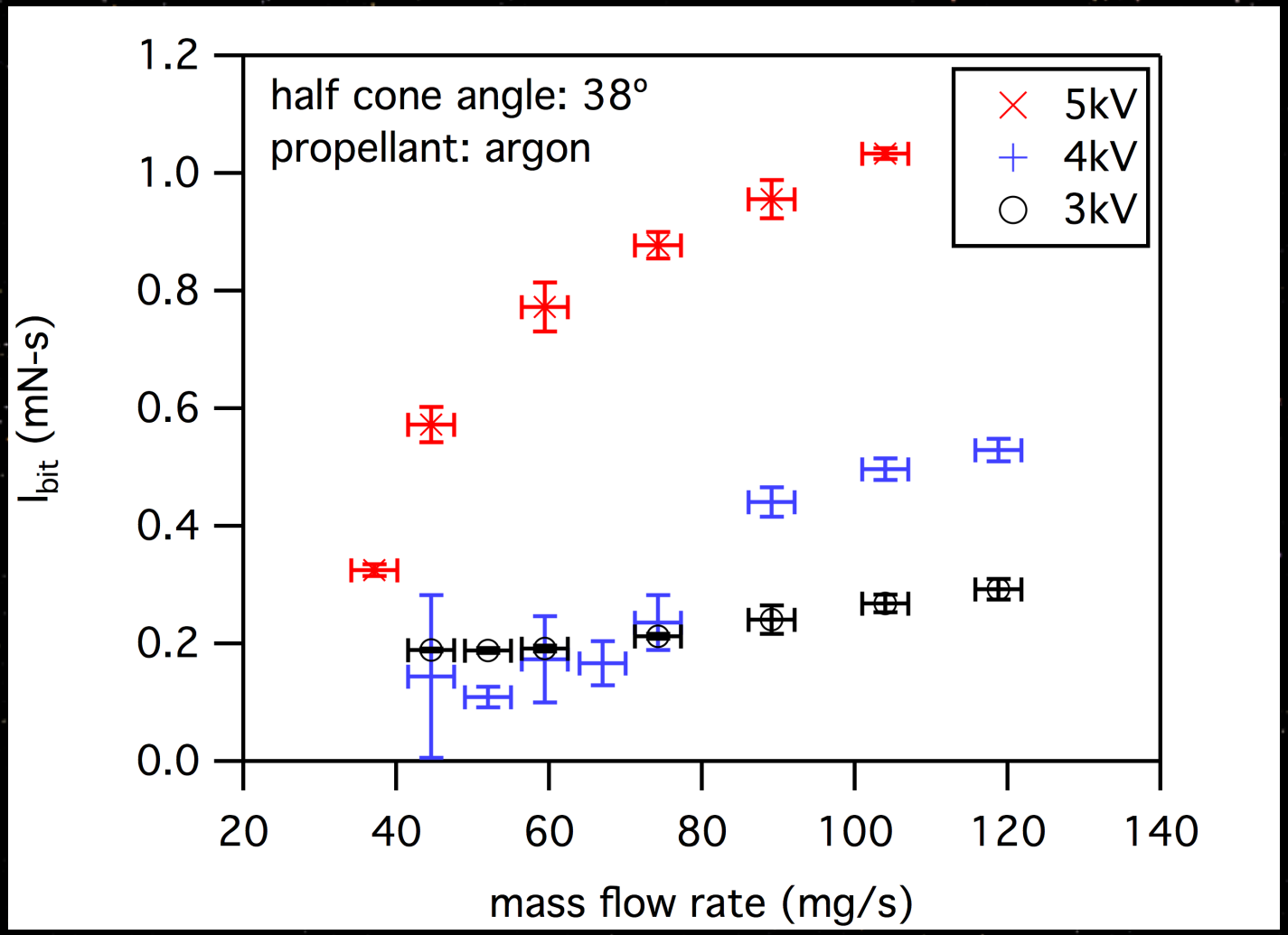

Impulse Bit Calculations for 20° and 38° operating on xenon

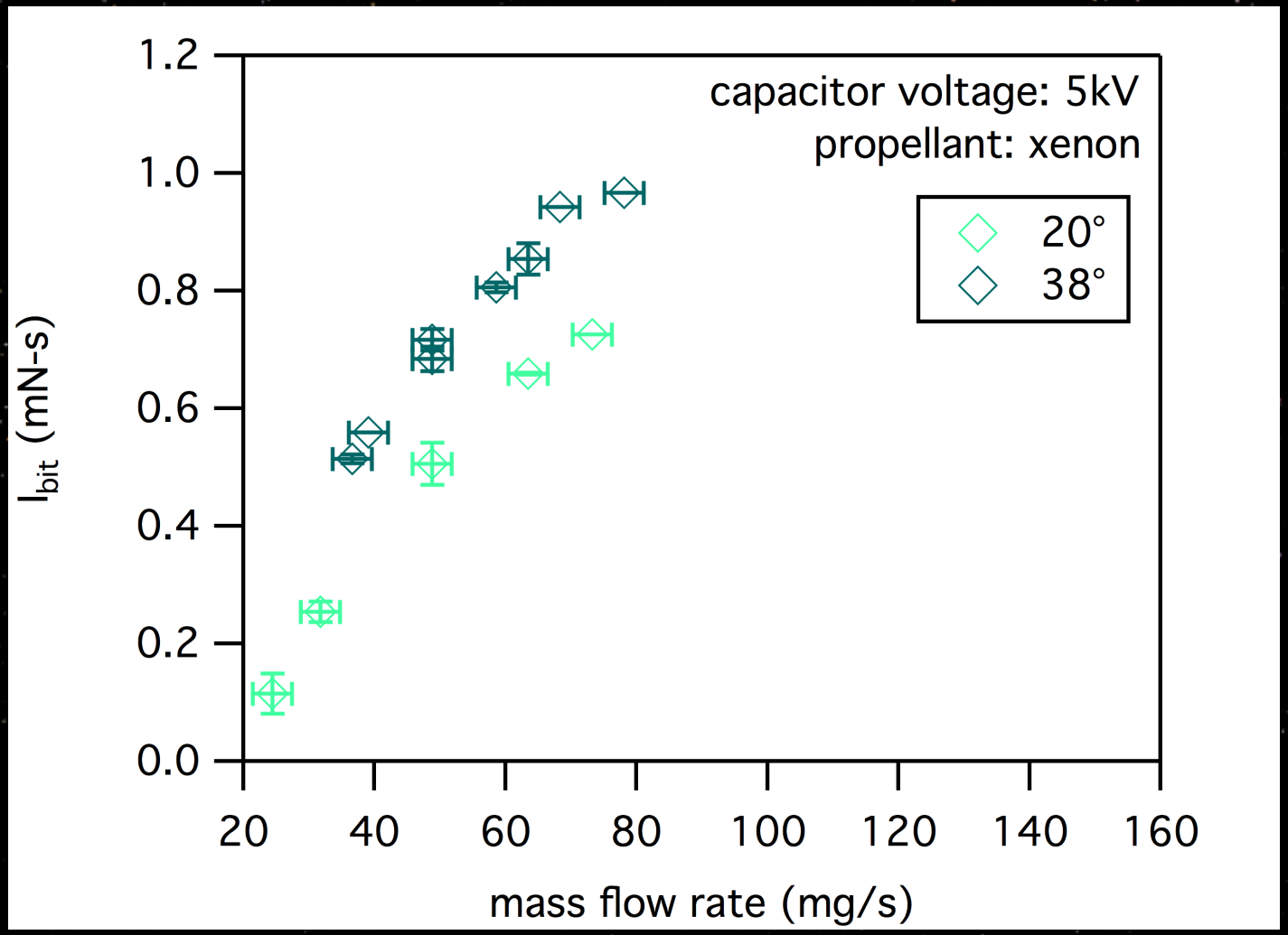

Experimental Results: Time-integrated Photographs

Varying mass flow rate of argon with 20°

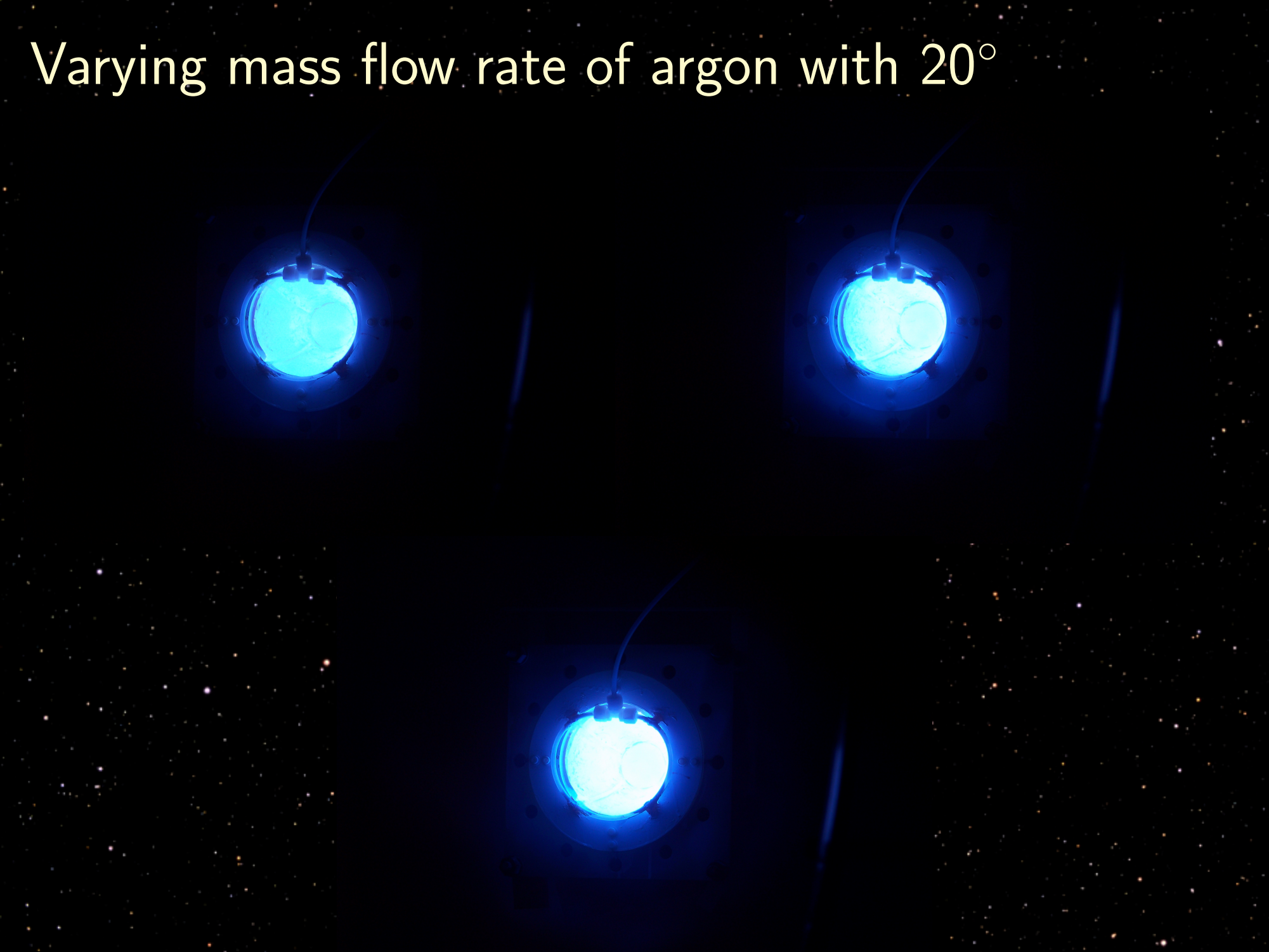

Varying mass flow rate of xenon with 20°

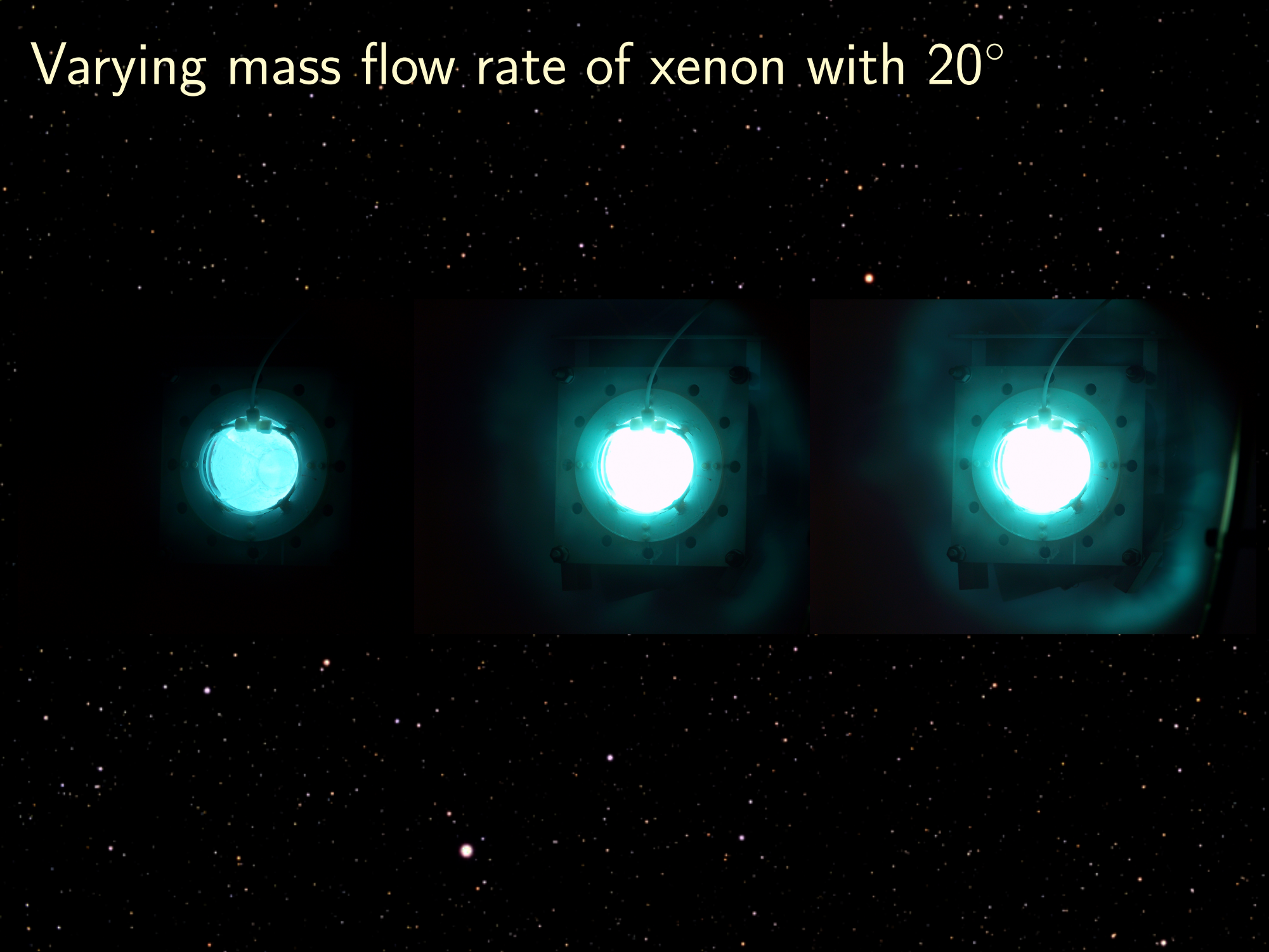

Varying mass flow rate of argon with 38°

Varying mass flow rate of argon with 38°

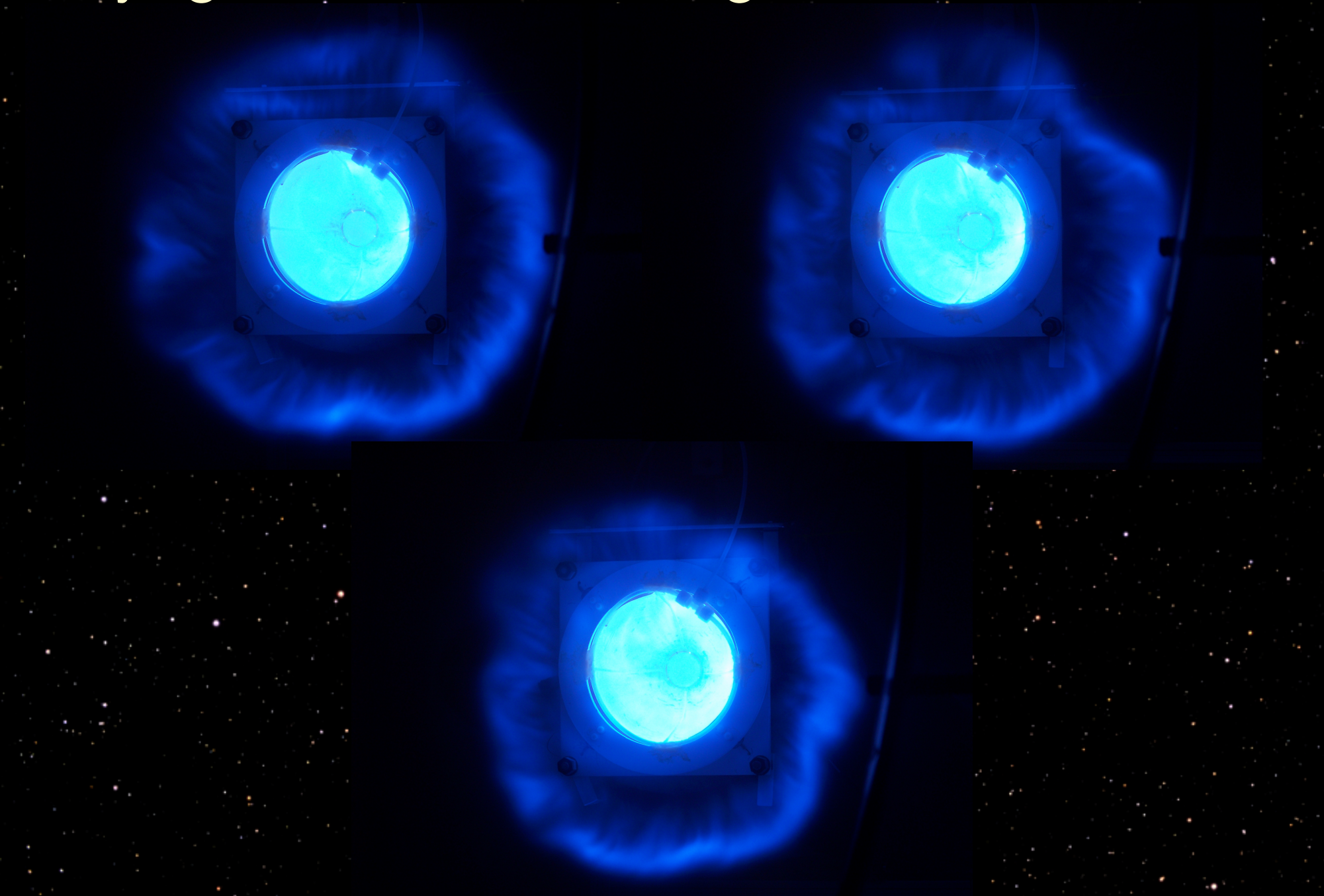

Varying mass flow rate of xenon with 38°

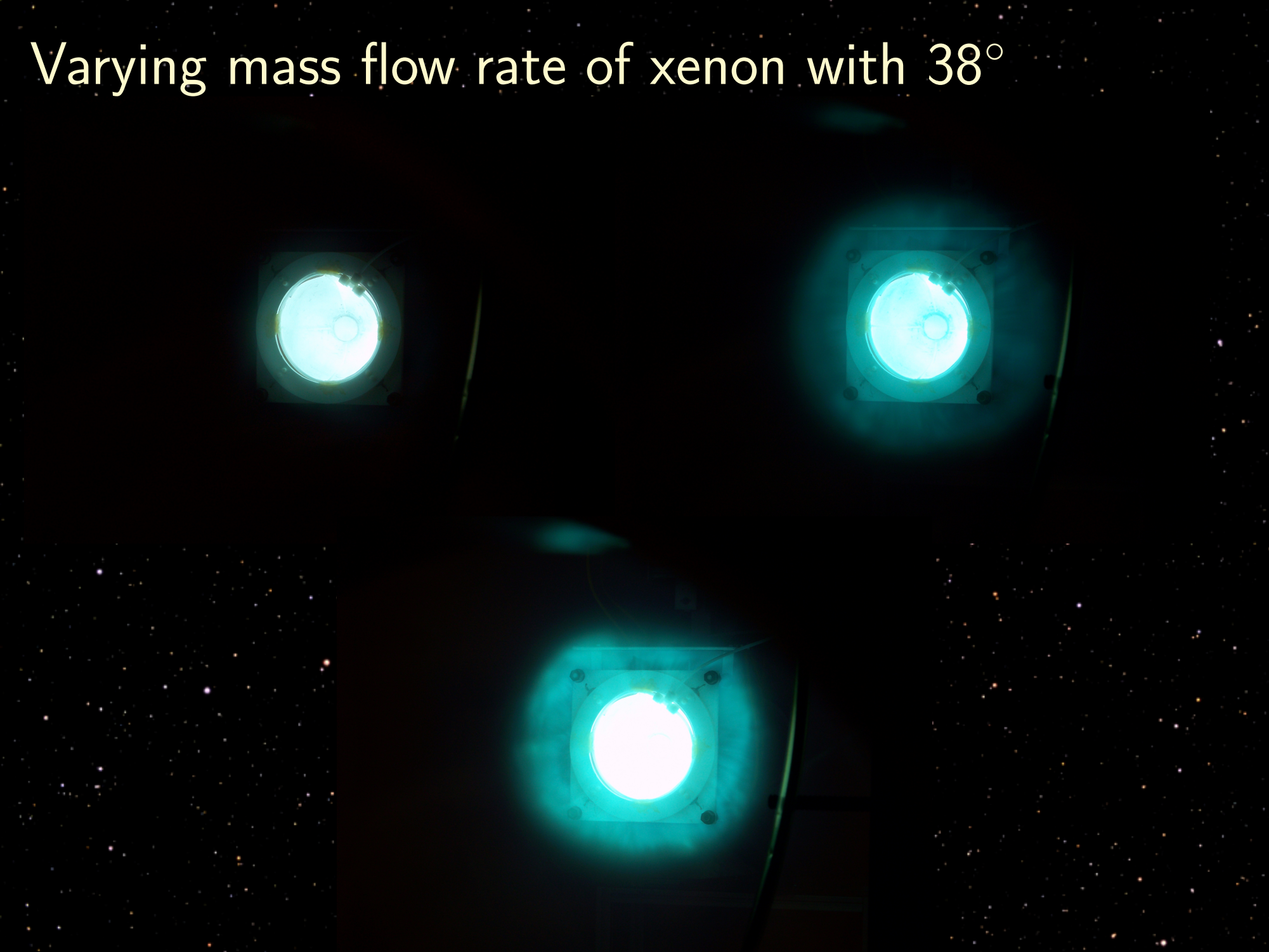

Time-resolved Video of xenon with 38°

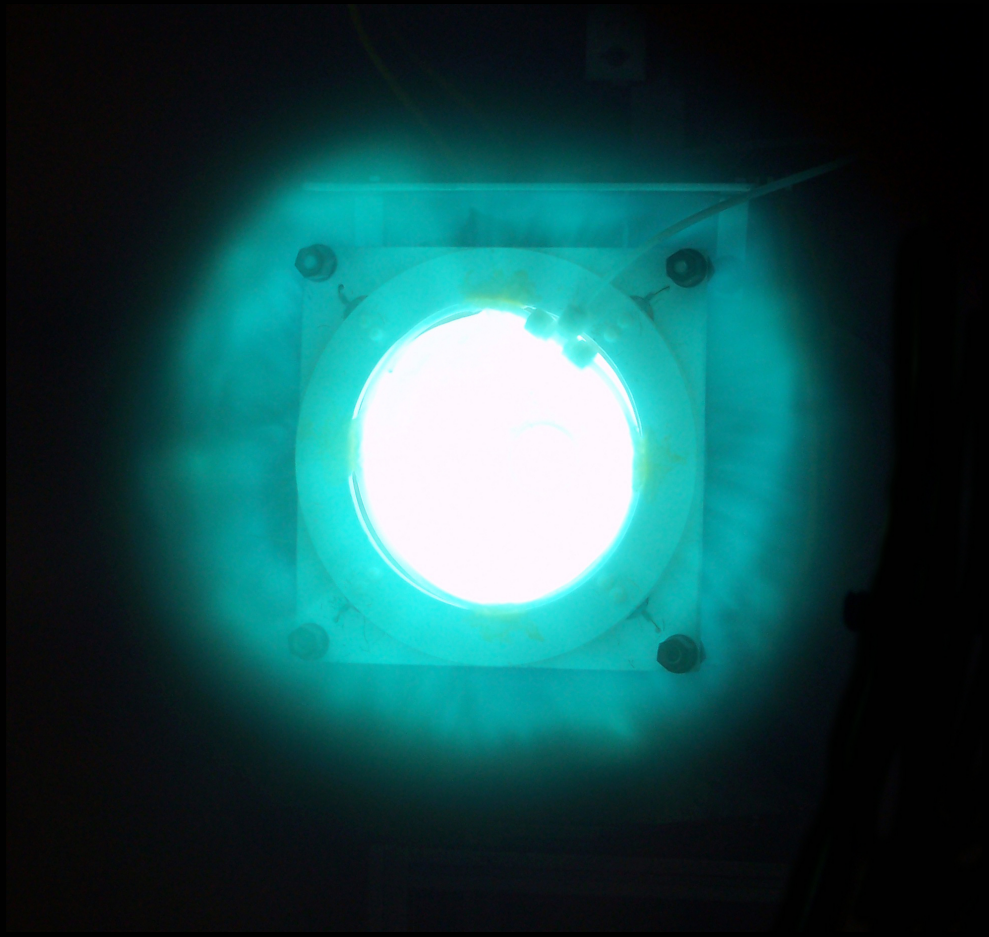

Operation at 5 Hz: Thrust Measurements

Voltage and Thrust Stand Displacement for 38°

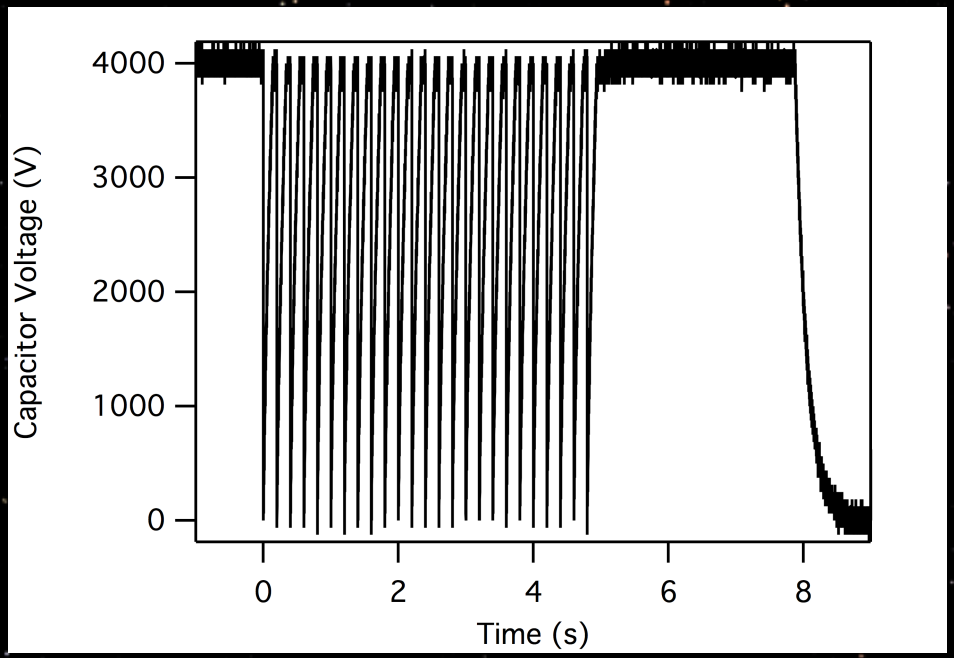

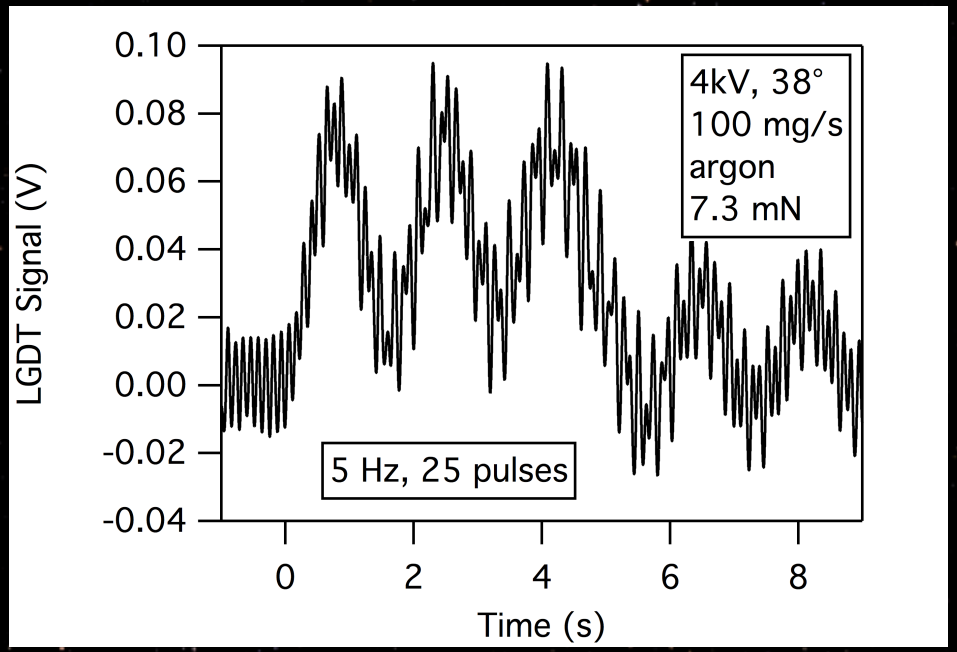

Thrust Calculations for 38°

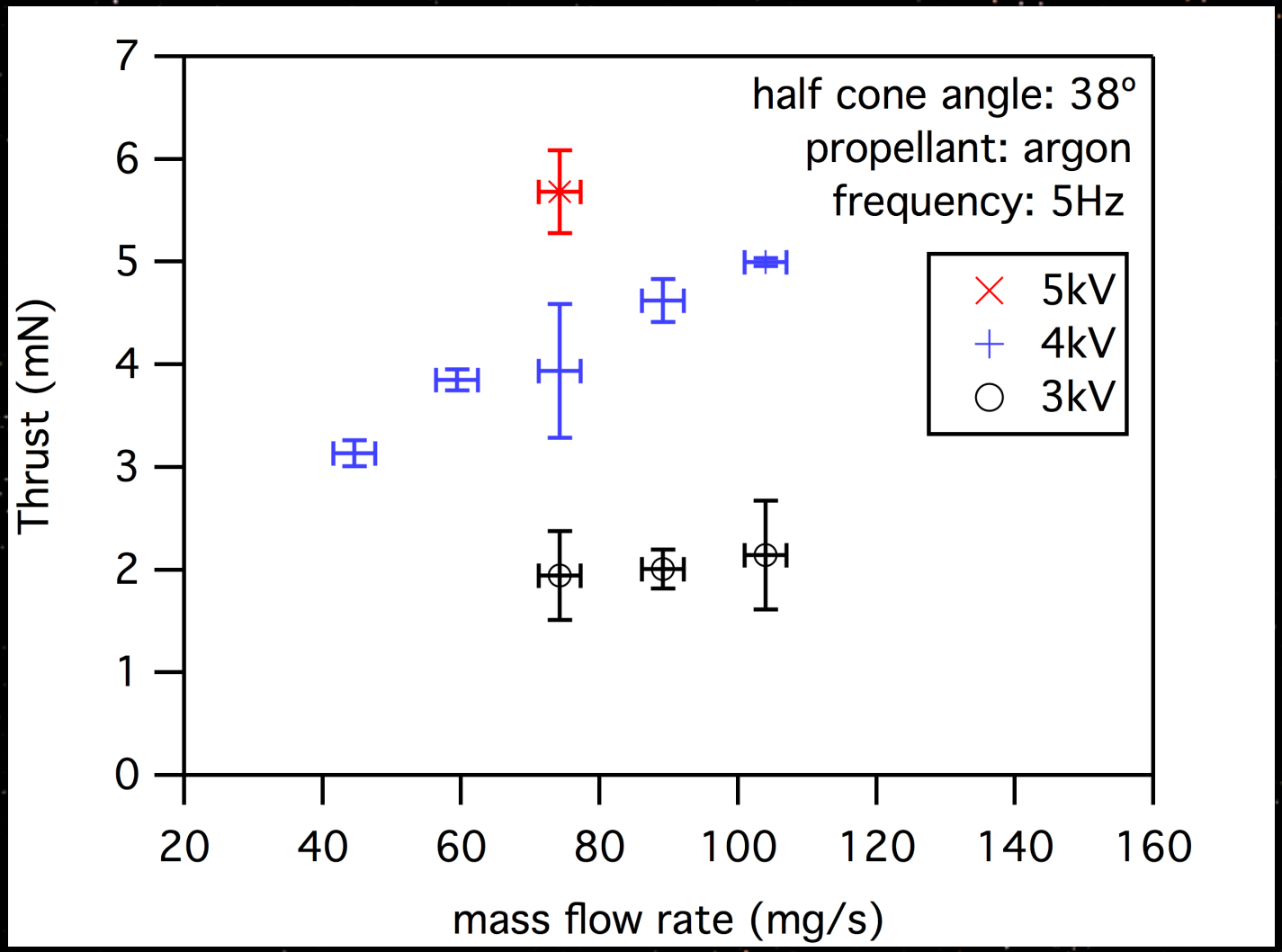

Video of 5 Hz operation with 38° on argon

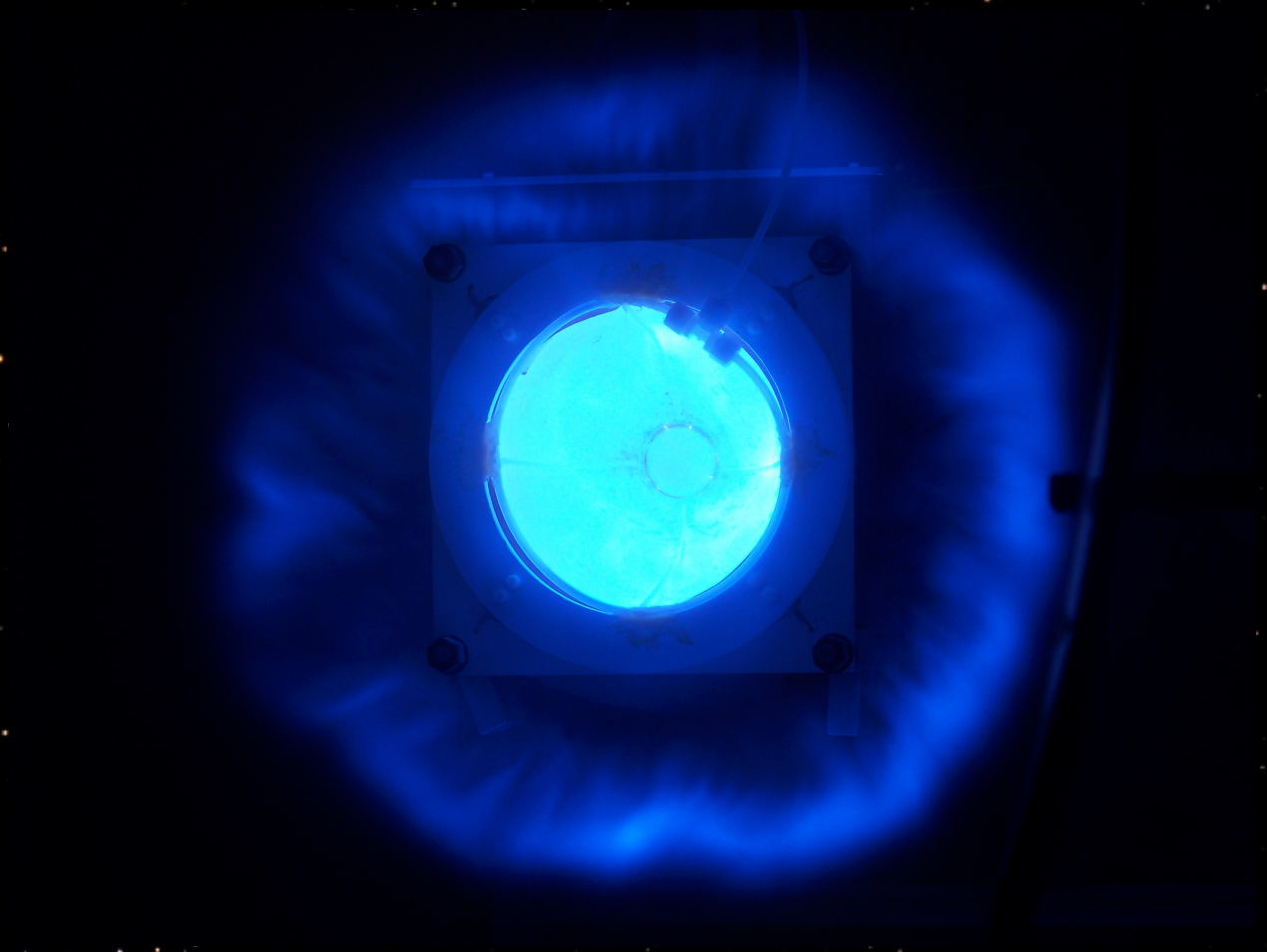

Discussion of Experimental Results

Previous analytical results suggest radial motion is detrimental to thrust

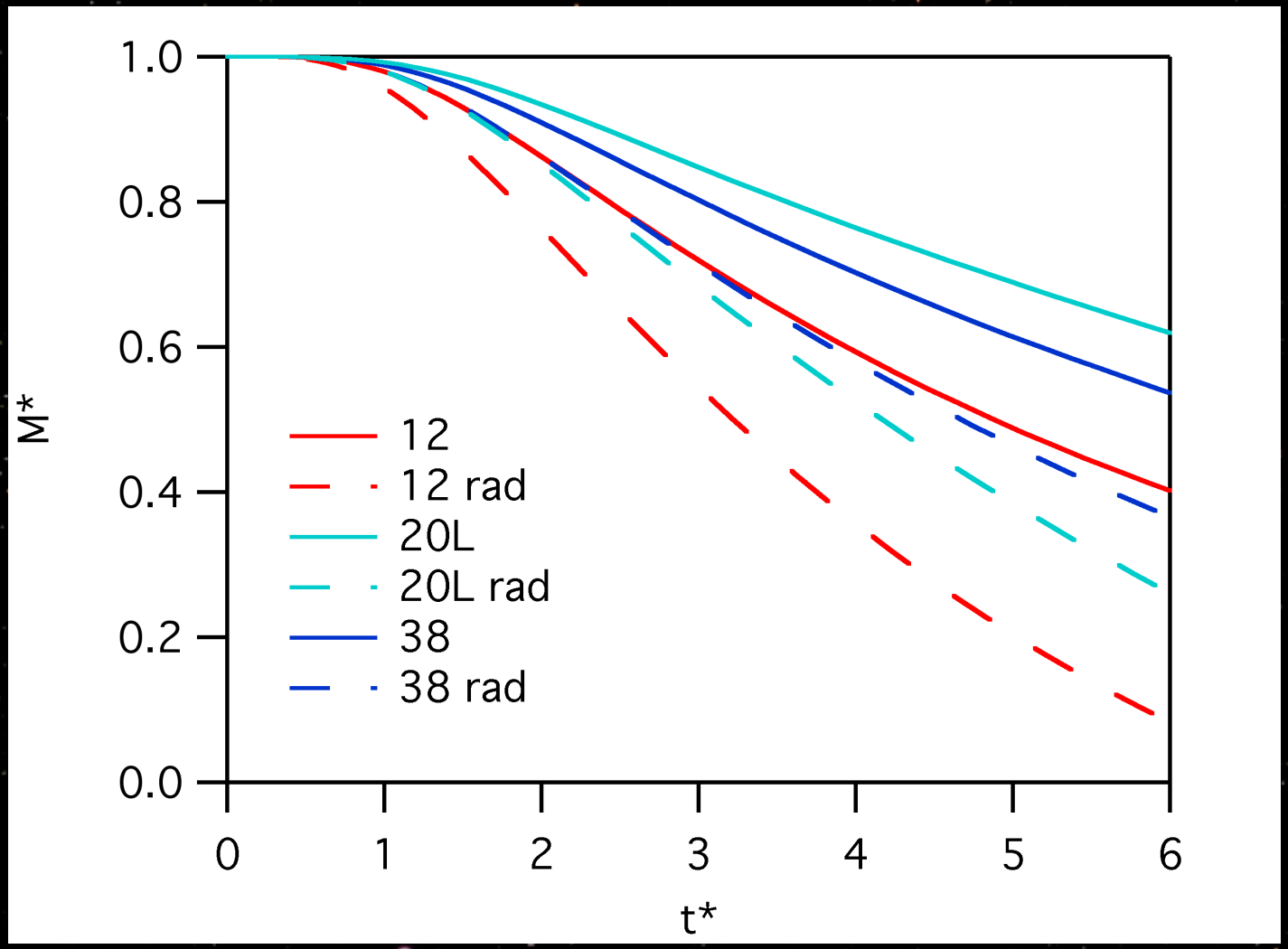

Previous analytical results suggest radial motion is detrimental to thrust

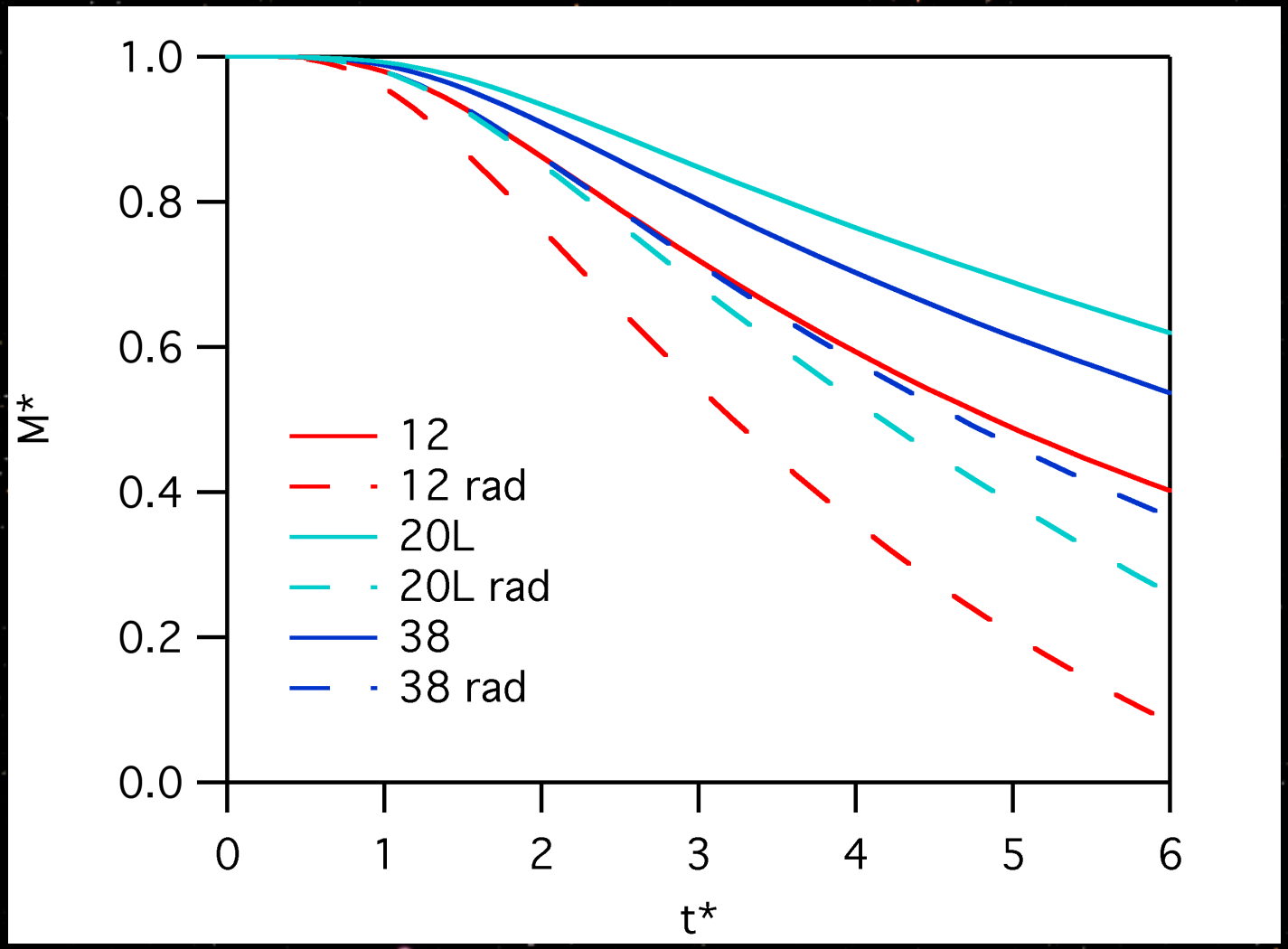

Result: Intermediate angle produced highest thrust

Conclusions

Conclusions

- Electromagnetic acceleration and propellant utilization may be competing processes

Conclusions

- Electromagnetic acceleration and propellant utilization may be competing processes
- Thruster with 38° half cone angle produced the highest impulse overall

Conclusions

- Electromagnetic acceleration and propellant utilization may be competing processes
- Thruster with 38° half cone angle produced the highest impulse overall
- Gas dynamics may have same or higher influence on performance as electrodynamics

Conclusions

- Electromagnetic acceleration and propellant utilization may be competing processes
- Thruster with 38° half cone angle produced the highest impulse overall
- Gas dynamics may have same or higher influence on performance as electrodynamics
- As of now only electromagnetics are quantified

Conclusions

- Electromagnetic acceleration and propellant utilization may be competing processes
- Thruster with 38° half cone angle produced the highest impulse overall
- Gas dynamics may have same or higher influence on performance as electrodynamics
- As of now only electromagnetics are quantified
- Next step could be quantifying gasdynamics and optimizing propellant injection

Acknowledgments

- Dr. Adam Martin, Mr. Jim Martin, Mr. Richard Eskridge, Dr. Noah Rhys, Mr. J. Boise Pearson
- NASA Advanced In-Space Propulsion Program managed by Dr. Michael LaPointe
- OCT In-Space Propulsion Program Managed by Mr. Timothy Smith

Questions?

Governing Equations via Kirchhoff's Law

$$\frac{dI_1}{dt} = \frac{L_C V - L_C R_e I_1 - M R_p I_2 + \left(L_C I_2 + M I_1\right) \frac{dM}{dt}}{L_C \left(L_0 + L_C\right) - M^2}$$

$$\frac{dI_2}{dt} = \frac{M \frac{dI_1}{dt} + I_1 \frac{dM}{dt} - R_p I_2}{L_C}$$

$$\frac{dV}{dt} = -\frac{I_1}{C}$$

Definition of a Radial Location

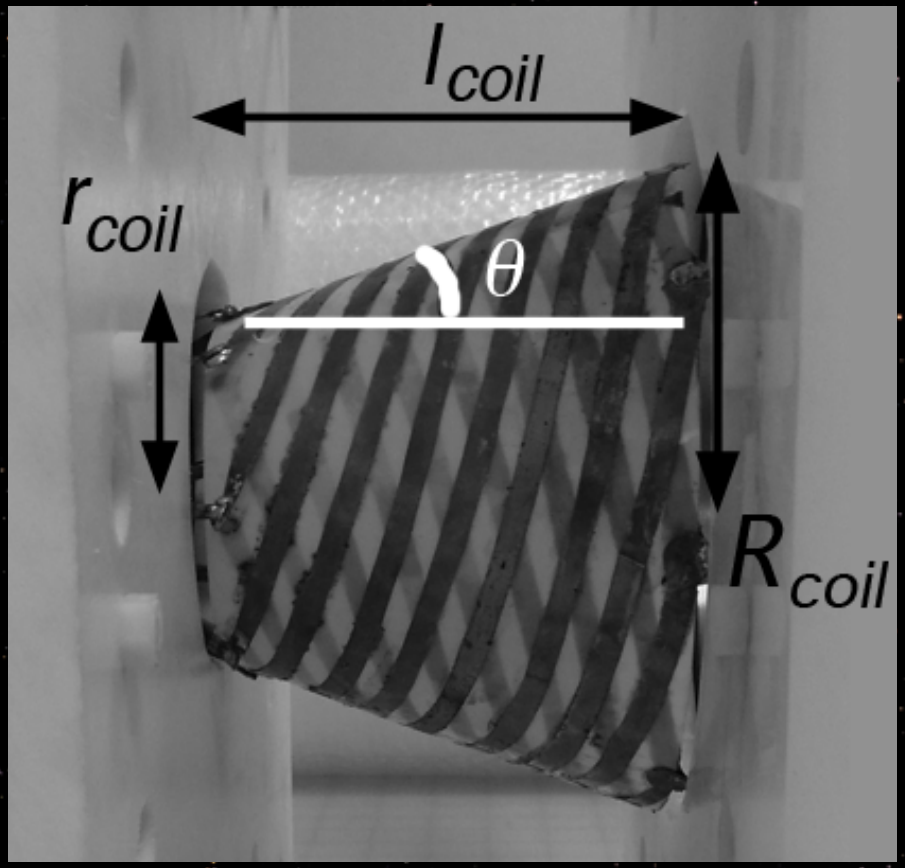

$$\bar{r} = 1/2\,(r_{minor} + R_{major})$$

$$\overline{r_{coil}} = 1/2\,(r_{coil} + R_{coil})$$

2-D Equations Governing Current Sheet Coupling

$$L_{tot} = L_0 + L_C - \frac{M^2}{L_C}$$

$$L_{tot}(\bar{r}, z) = L_0 + L_C \left(1 - \exp\left(-z/z_0\right) \left(\frac{\bar{r}}{\overline{r_{coil}}} \right)^N \right)$$

$$M = L_C \exp\left(-\frac{z}{2z_0} \right) \left(\frac{\bar{r}}{\overline{r_{coil}}} \right)^{N/2}$$

$$F_i = \frac{I^2}{2} \frac{\partial L}{\partial x_i}$$

2-D Equations Governing Current Sheet Coupling

$$\boxed{L_{tot} = L_0 + L_C - \frac{M^2}{L_C}}$$

$$L_{tot}(\bar{r}, z) = L_0 + L_C \left(1 - \exp\left(-z/z_0\right) \left(\frac{\bar{r}}{\overline{r_{coil}}} \right)^N \right)$$

$$M = L_C \exp\left(-\frac{z}{2z_0} \right) \left(\frac{\bar{r}}{\overline{r_{coil}}} \right)^{N/2}$$

$$F_i = \frac{I^2}{2} \frac{\partial L}{\partial x_i}$$

2-D Equations Governing Current Sheet Coupling

Circuit Eqns. $\boxed{L_{tot} = L_0 + L_C - \frac{M^2}{L_C}}$

$$L_{tot}(\bar{r}, z) = L_0 + L_C \left(1 - \exp\left(-z/z_0\right) \left(\frac{\bar{r}}{\overline{r_{coil}}} \right)^N \right)$$

$$M = L_C \exp\left(-\frac{z}{2z_0} \right) \left(\frac{\bar{r}}{\overline{r_{coil}}} \right)^{N/2}$$

$$F_i = \frac{I^2}{2} \frac{\partial L}{\partial x_i}$$

2-D Equations Governing Current Sheet Coupling

$$L_{tot} = L_0 + L_C - \frac{M^2}{L_C}$$

$$\boxed{L_{tot}(\bar{r}, z) = L_0 + L_C \left(1 - \exp\left(-z/z_0\right) \left(\frac{\bar{r}}{\overline{r_{coil}}} \right)^N \right)}$$

$$M = L_C \exp\left(-\frac{z}{2z_0} \right) \left(\frac{\bar{r}}{\overline{r_{coil}}} \right)^{N/2}$$

$$F_i = \frac{I^2}{2} \frac{\partial L}{\partial x_i}$$

2-D Equations Governing Current Sheet Coupling

$$L_{tot} = L_0 + L_C - \frac{M^2}{L_C}$$

$$\boxed{L_{tot}(\bar{r}, z) = L_0 + L_C \left(1 - \exp\left(-z/z_0\right) \left(\frac{\bar{r}}{\overline{r_{coil}}} \right)^N \right)}$$

Empirical

$$M = L_C \exp\left(-\frac{z}{2z_0} \right) \left(\frac{\bar{r}}{\overline{r_{coil}}} \right)^{N/2}$$

$$F_i = \frac{I^2}{2} \frac{\partial L}{\partial x_i}$$

2-D Equations Governing Current Sheet Coupling

$$L_{tot} = L_0 + L_C - \frac{M^2}{L_C}$$

$$L_{tot}(\bar{r}, z) = L_0 + L_C \left(1 - \exp\left(-z/z_0\right) \left(\frac{\bar{r}}{\overline{r_{coil}}} \right)^N \right)$$

$$M = L_C \exp\left(-\frac{z}{2z_0} \right) \left(\frac{\bar{r}}{\overline{r_{coil}}} \right)^{N/2}$$

$$F_i = \frac{I^2}{2} \frac{\partial L}{\partial x_i}$$

2-D Equations Governing Current Sheet Coupling

$$L_{tot} = L_0 + L_C - \frac{M^2}{L_C}$$

$$L_{tot}(\bar{r}, z) = L_0 + L_C \left(1 - \exp\left(-z/z_0\right) \left(\frac{\bar{r}}{\overline{r_{coil}}} \right)^N \right)$$

$$M = L_C \exp\left(-\frac{z}{2z_0} \right) \left(\frac{\bar{r}}{\overline{r_{coil}}} \right)^{N/2}$$

$$F_i = \frac{I^2}{2} \frac{\partial L}{\partial x_i}$$

2-D Equations Governing Current Sheet Coupling

$$L_{tot} = L_0 + L_C - \frac{M^2}{L_C}$$

$$L_{tot}(\bar{r}, z) = L_0 + L_C \left(1 - \exp\left(-z/z_0\right) \left(\frac{\bar{r}}{\overline{r_{coil}}} \right)^N \right)$$

$$M = L_C \exp\left(-\frac{z}{2z_0} \right) \left(\frac{\bar{r}}{\overline{r_{coil}}} \right)^{N/2}$$

$$F_i = \frac{I^2}{2} \frac{\partial L}{\partial x_i}$$

2-D Equations Governing Current Sheet Coupling

$$L_{tot} = L_0 + L_C - \frac{M^2}{L_C}$$

$$L_{tot}(\bar{r}, z) = L_0 + L_C \left(1 - \exp\left(-z/z_0\right) \left(\frac{\bar{r}}{\overline{r_{coil}}} \right)^N \right)$$

$$\boxed{M = L_C \exp\left(-\frac{z}{2z_0} \right) \left(\frac{\bar{r}}{\overline{r_{coil}}} \right)^{N/2}}$$

$$F_i = \frac{I^2}{2} \frac{\partial L}{\partial x_i}$$

2-D Equations Governing Current Sheet Coupling

$$L_{tot} = L_0 + L_C - \frac{M^2}{L_C}$$

$$L_{tot}(\bar{r}, z) = L_0 + L_C \left(1 - \exp\left(-z/z_0\right) \left(\frac{\bar{r}}{\overline{r_{coil}}} \right)^N \right)$$

$$M = L_C \exp\left(-\frac{z}{2z_0} \right) \left(\frac{\bar{r}}{\overline{r_{coil}}} \right)^{N/2}$$

$$\boxed{F_i = \frac{I^2}{2} \frac{\partial L}{\partial x_i}}$$

2-D Equations Governing Current Sheet Coupling

$$L_{tot} = L_0 + L_C - \frac{M^2}{L_C}$$

$$L_{tot}(\bar{r}, z) = L_0 + L_C \left(1 - \exp\left(-z/z_0\right) \left(\frac{\bar{r}}{\overline{r_{coil}}} \right)^N \right)$$

$$M = L_C \exp\left(-\frac{z}{2z_0} \right) \left(\frac{\bar{r}}{\overline{r_{coil}}} \right)^{N/2}$$

$$\boxed{F_i = \frac{I^2}{2} \frac{\partial L}{\partial x_i}}$$

2-D Equations Governing Current Sheet Coupling

$$L_{tot} = L_0 + L_C - \frac{M^2}{L_C}$$

$$L_{tot}(\bar{r}, z) = L_0 + L_C \left(1 - \exp\left(-z/z_0\right) \left(\frac{\bar{r}}{\overline{r_{coil}}} \right)^N \right)$$

$$M = L_C \exp\left(-\frac{z}{2z_0} \right) \left(\frac{\bar{r}}{\overline{r_{coil}}} \right)^{N/2}$$

$$\boxed{F_i = \frac{I^2}{2} \frac{\partial L}{\partial x_i}}$$

Equations Governing Current Sheet Motion

$$\frac{dv_z}{dt} = \frac{\left[\frac{L_C I_1^2}{2z_0} \exp\left(-\frac{z}{z_0}\right)\left(\frac{\bar{r}}{\overline{r_{coil}}}\right)^N\right]}{m_{bit}}$$

$$\frac{dv_r}{dt} = \frac{\left[P_2 2\pi \bar{r} l_{coil} - \frac{L_C I_1^2 N}{2\overline{r_{coil}}^N} \exp\left(-\frac{z}{z_0}\right)(\bar{r})^{N-1}\right]}{m_{bit}}$$

$$\frac{P_2}{P_1} = 1 + \frac{2\gamma}{\gamma+1}\left[\mathcal{M}^2 - 1\right]$$

Equations Governing Current Sheet Motion

$$\frac{dv_z}{dt} = \frac{\left[\frac{L_C I_1^2}{2z_0} \exp\left(-\frac{z}{z_0}\right)\left(\frac{\bar{r}}{\overline{r_{coil}}}\right)^N\right]}{m_{bit}}$$

$$\frac{dv_r}{dt} = \frac{\left[P_2 2\pi \bar{r} l_{coil} - \frac{L_C I_1^2 N}{2\overline{r_{coil}}^N} \exp\left(-\frac{z}{z_0}\right)(\bar{r})^{N-1}\right]}{m_{bit}}$$

$$\frac{P_2}{P_1} = 1 + \frac{2\gamma}{\gamma+1}\left[\mathcal{M}^2 - 1\right]$$

Equations Governing Current Sheet Motion

$$\frac{dv_z}{dt} = \frac{\left[\frac{L_C I_1^2}{2z_0} \exp\left(-\frac{z}{z_0}\right)\left(\frac{\bar{r}}{\overline{r_{coil}}}\right)^N\right]}{m_{bit}}$$

$$\frac{dv_r}{dt} = \frac{\left[P_2 2\pi \bar{r} l_{coil} - \frac{L_C I_1^2 N}{2\overline{r_{coil}}^N} \exp\left(-\frac{z}{z_0}\right)(\bar{r})^{N-1}\right]}{m_{bit}}$$

$$\frac{P_2}{P_1} = 1 + \frac{2\gamma}{\gamma+1}\left[\mathcal{M}^2 - 1\right]$$

Equations Governing Current Sheet Motion

$$\frac{dv_z}{dt} = \frac{\left[\frac{L_C I_1^2}{2z_0} \exp\left(-\frac{z}{z_0}\right)\left(\frac{\bar{r}}{\overline{r_{coil}}}\right)^N\right]}{m_{bit}}$$

$$\frac{dv_r}{dt} = \frac{\left[P_2 2\pi \bar{r} l_{coil} - \frac{L_C I_1^2 N}{2\overline{r_{coil}}^N} \exp\left(-\frac{z}{z_0}\right)(\bar{r})^{N-1}\right]}{m_{bit}}$$

$$\frac{P_2}{P_1} = 1 + \frac{2\gamma}{\gamma+1}\left[\mathcal{M}^2 - 1\right]$$

Equations Governing Current Sheet Motion

$$\frac{dv_z}{dt} = \frac{\left[\frac{L_C I_1^2}{2z_0} \exp\left(-\frac{z}{z_0}\right)\left(\frac{\bar{r}}{\overline{r_{coil}}}\right)^N\right]}{m_{bit}}$$

$$\boxed{\frac{dv_r}{dt} = \frac{\left[P_2 2\pi \bar{r} l_{coil} - \frac{L_C I_1^2 N}{2\overline{r_{coil}}^N} \exp\left(-\frac{z}{z_0}\right)(\bar{r})^{N-1}\right]}{m_{bit}}}$$

$$\frac{P_2}{P_1} = 1 + \frac{2\gamma}{\gamma+1}\left[\mathcal{M}^2 - 1\right]$$

Equations Governing Current Sheet Motion

$$\frac{dv_z}{dt} = \frac{\left[\frac{L_C I_1^2}{2z_0} \exp\left(-\frac{z}{z_0}\right)\left(\frac{\bar{r}}{\overline{r_{coil}}}\right)^N\right]}{m_{bit}}$$

$$\frac{dv_r}{dt} = \frac{\left[P_2 2\pi \bar{r} I_{coil} - \frac{L_C I_1^2 N}{2\overline{r_{coil}}^N} \exp\left(-\frac{z}{z_0}\right)(\bar{r})^{N-1}\right]}{m_{bit}}$$

$$\frac{P_2}{P_1} = 1 + \frac{2\gamma}{\gamma+1}\left[\mathcal{M}^2 - 1\right]$$

Equations Governing Current Sheet Motion

$$\frac{dv_z}{dt} = \frac{\left[\frac{L_C I_1^2}{2z_0} \exp\left(-\frac{z}{z_0}\right)\left(\frac{\bar{r}}{\overline{r_{coil}}}\right)^N\right]}{m_{bit}}$$

$$\frac{dv_r}{dt} = \frac{\left[P_2 2\pi \bar{r} l_{coil} - \frac{L_C I_1^2 N}{2\overline{r_{coil}}^N} \exp\left(-\frac{z}{z_0}\right)(\bar{r})^{N-1}\right]}{m_{bit}}$$

$$\frac{P_2}{P_1} = 1 + \frac{2\gamma}{\gamma+1}\left[\mathcal{M}^2 - 1\right]$$