Mass Produced Flock of Propulsion Units for Interplanetary and Interstellar Mission Cost Reduction

By Chris Y. Taylor

19th Advanced Space Propulsion Workshop (ASPW 2012)

Nov. 28, 2012

chrisytaylor@yahoo.com

Before we begin:

Find time to visit the Robert L Forward collection at UAH library.

Library Hours: Monday - Thursday7:30am –Midnight

Address: 301 Sparkman Drive, Huntsville AL

http://archives.uah.edu/forward/forward.html

Dr. Forward's papers (and a vest) on file, including an unpublished short story and calculations on using heat pump to improve spacecraft radiator efficiency.

How Do We Think of a Starship?

Old Concept: A Huge, Expensive Engineering Marvel

Alternative: A Co-operating Flock of Small, Economical, Mass Produced Units

Fuel Transfer Flock

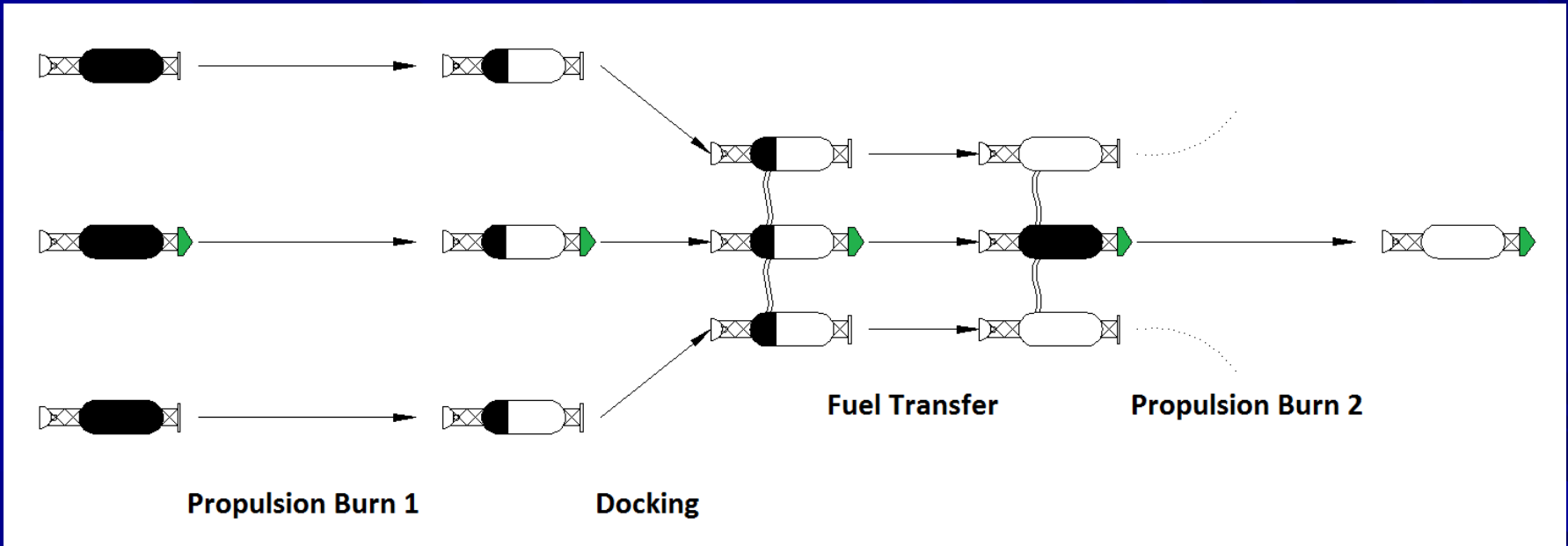

Fuel Tank Transfer Flock

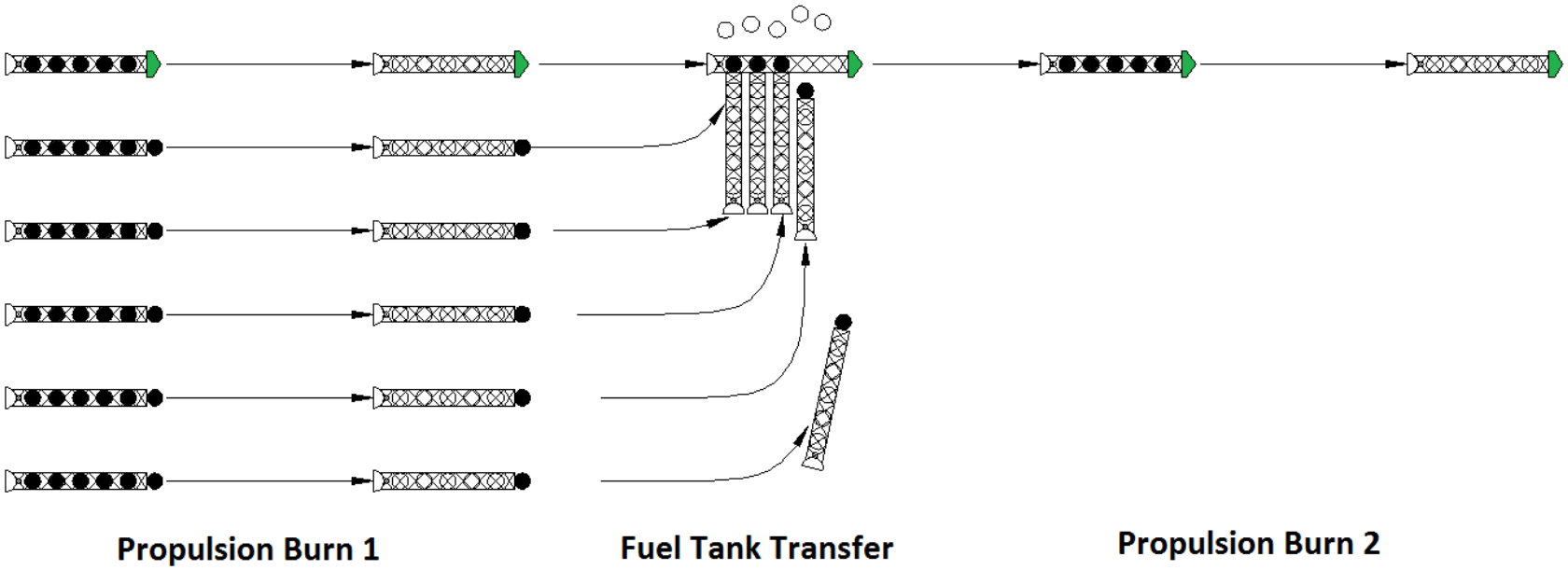

Momentum Transfer Flock

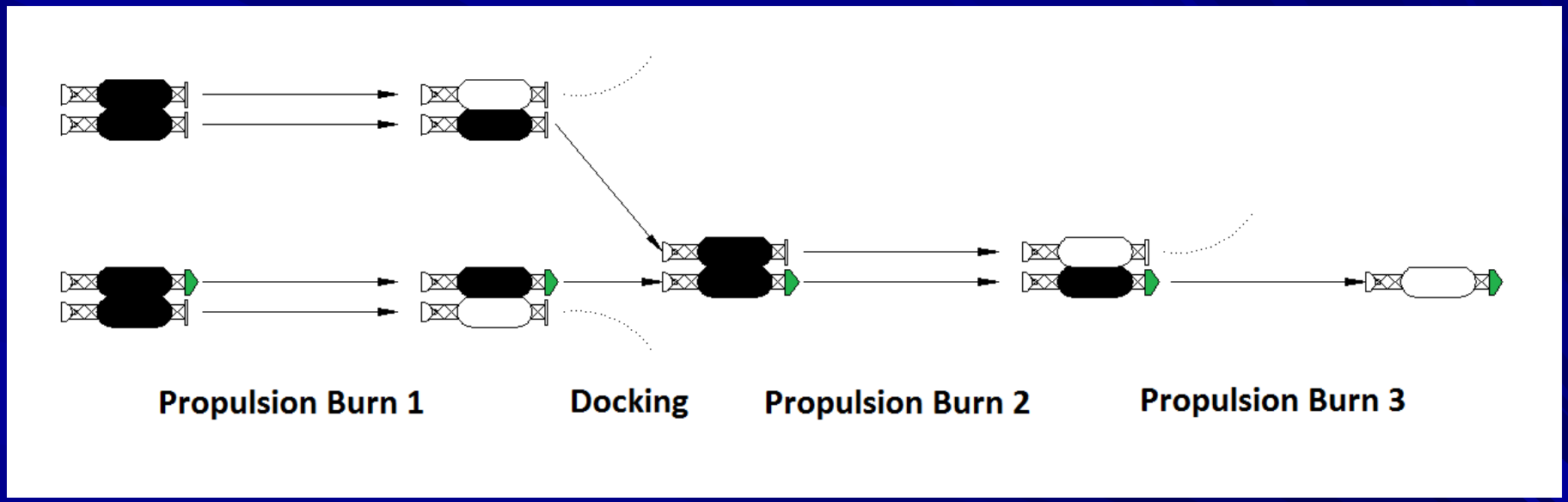

Some advantages are similar to staging. Minimizes engine restarts.

Scales to Arbitrarily Large Size

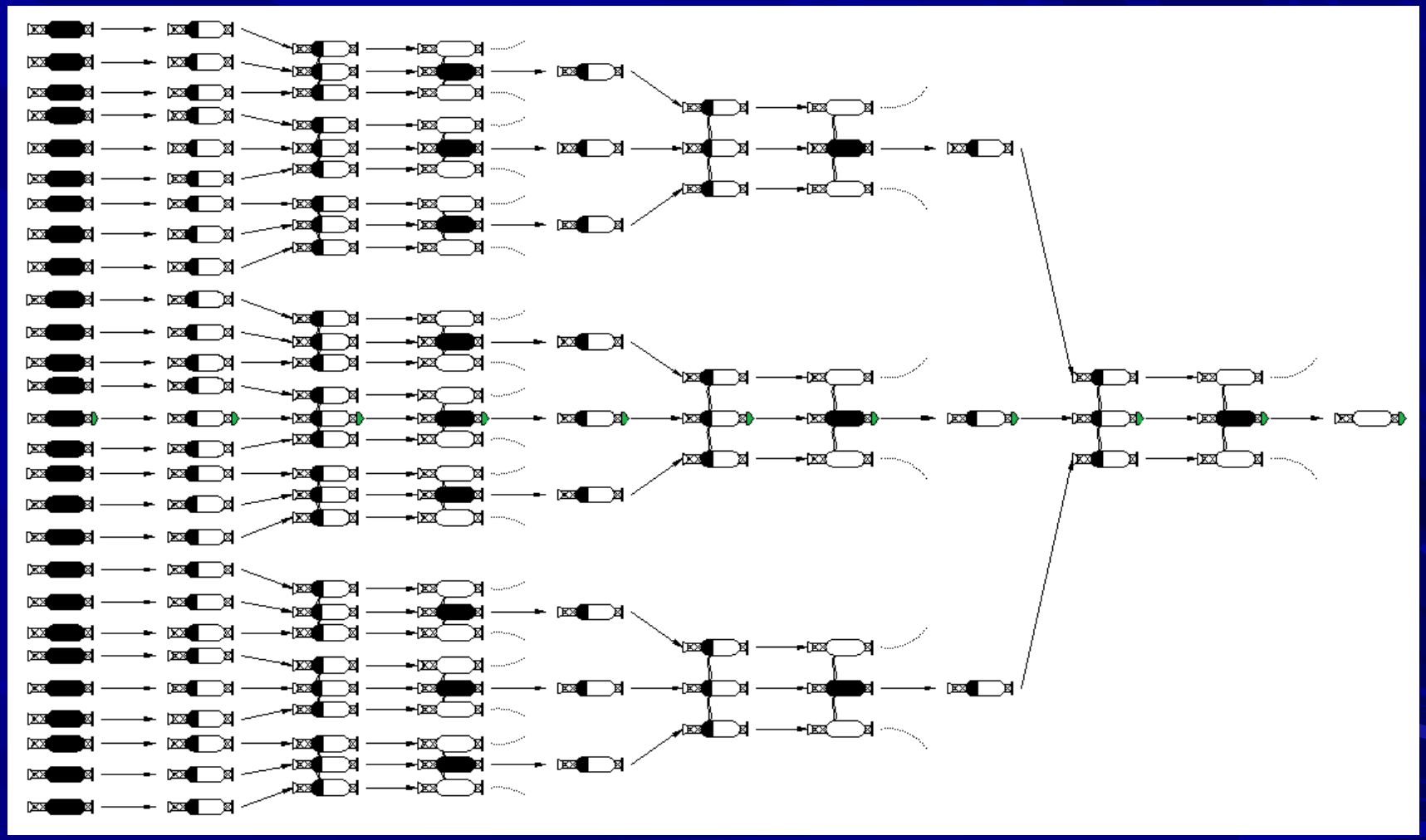

Huge propulsion systems can be built from lots of small mass produced units.

Replace Huge Rocket w/ Co-operating Flock of Small Rockets

Pros

- ♥Small Size = R&D Cost Much, Much Lower
- ♥Mass Production = Lower Fabrication Cost & More Reliability
- ♥Change Payload or ΔV by Altering Flock Size
- ♥Physical Separation = Failure Tolerant

Cons

- Lower Prop. Mass Fraction (sometimes)
- Duplication of Components
- More Complicated Guidance Problem
- Some Propulsion Tech May Require Large Size to Work

Development Cost is Major Expense

Development cost ∝ dry mass, so to reduce cost design a small vehicle and duplicate it as needed.

Don’t pay to design these stages!

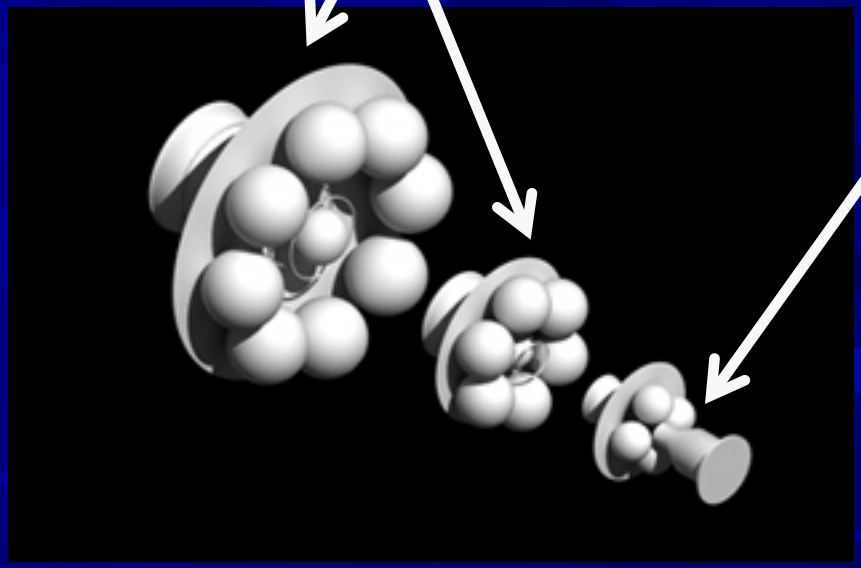

Just design this little one, mass produce it, and send a fleet of them.

Cost optimized design is not the same as performance optimized design.

Replace Huge Rocket w/ Co-operating Flock of Small Rockets

Pros

- ♥Small Size = R&D Cost Much, Much Lower
- ♥Mass Production = Lower Fabrication Cost & More Reliability
- ♥Change Payload or ΔV by Altering Flock Size
- ♥Physical Separation = Failure Tolerant

Cons

- Lower Prop. Mass Fraction (sometimes)
- Duplication of Components
- More Complicated Guidance Problem
- Some Propulsion Tech May Require Large Size to Work

Same Vehicle, Very Different Missions

Maybe we can go to the moon…

Same Vehicle, Very Different Missions

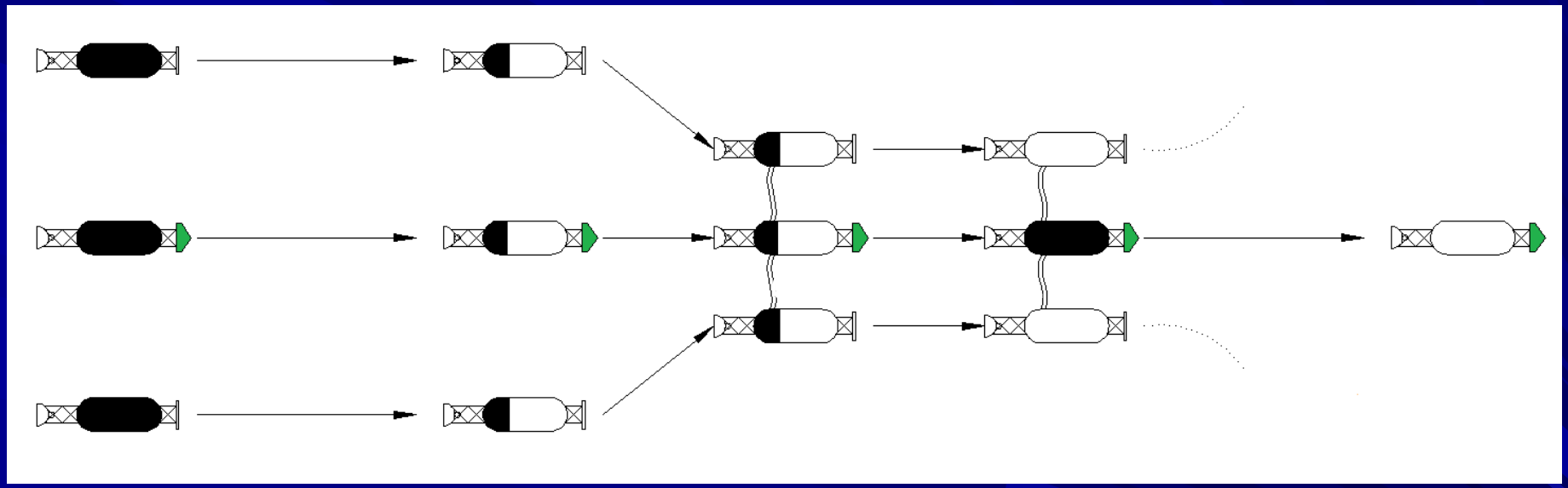

to Mars…

Same Vehicle, Very Different Missions

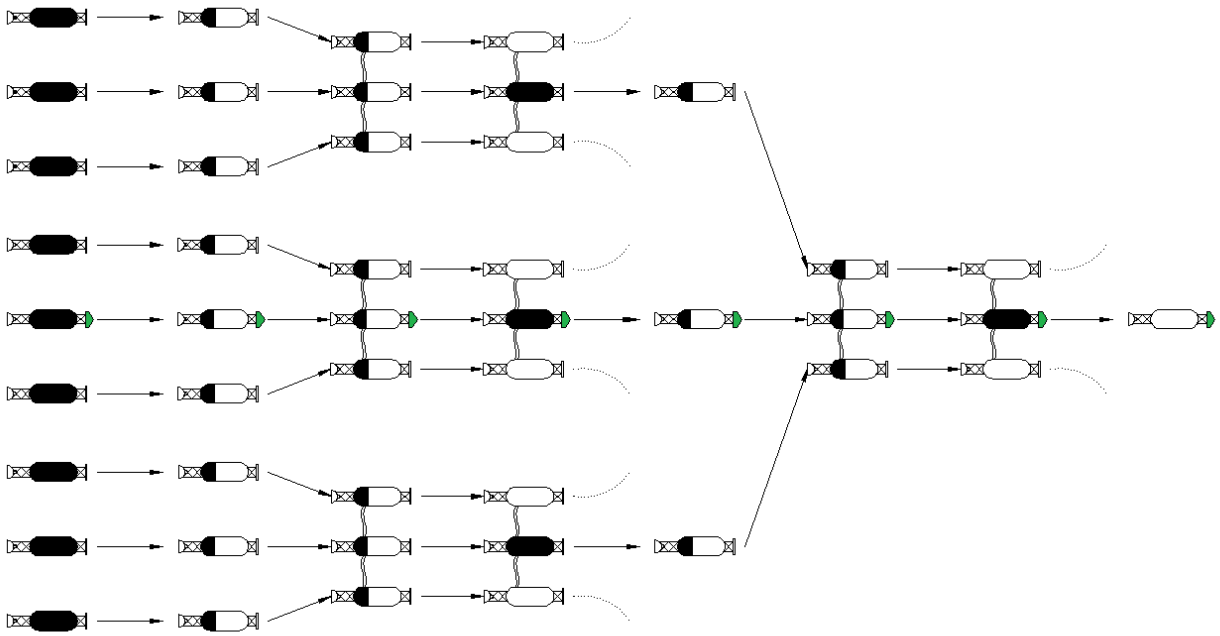

to the outer planets…

Same Vehicle, Very Different Missions

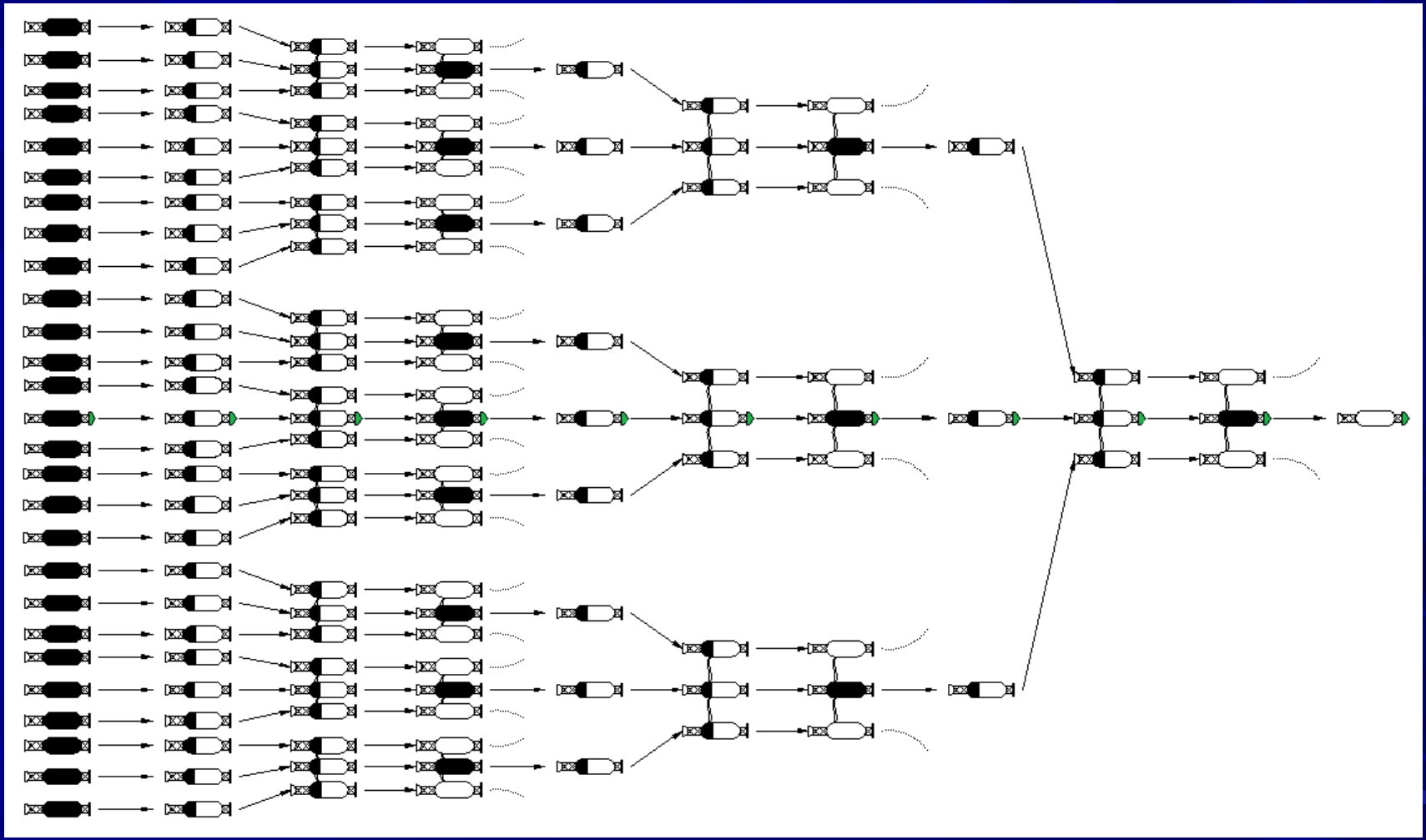

and interstellar precursor destinations with the same vehicle.

Reusing and evolving same design is not only cheap, but promotes reliability.

Replace Huge Rocket w/ Co-operating Flock of Small Rockets

Pros

- ♥Small Size = R&D Cost Much, Much Lower
- ♥Mass Production = Lower Fabrication Cost & More Reliability
- ♥Change Payload or ΔV by Altering Flock Size
- ♥Physical Separation = Failure Tolerant

Cons

- Lower Prop. Mass Fraction (sometimes)
- Duplication of Components
- More Complicated Guidance Problem
- Some Propulsion Tech May Require Large Size to Work

Example 1: University “Minirocket” One Design, Many Missions

Budget and political will for an Orion or Daedalus seems unlikely right now.

Look to Deep Space 1, University sats and Cube sats as development model.

- Small = less new infrastructure needed.
- Cheap = build and test hardware in universities and small businesses.
- Low Profile = build, fail, learn, build more.

What might that look like?

Example 1: Minirocket Assumptions

Isp = 1,000 sec
Empty Mass = 100 lbs.
Propellant Mass Fraction = 60%
Propellant Mass = 150 lbs.
Gross Mass = 250 lbs.

“Tanker truck” payload fuel tanks: 80% propellant mass fraction and storable.

Ability to transfer fuel or tanks between units & tanks.

Reliable engine restarts.

Example 1: ΔV vs. Flock Size

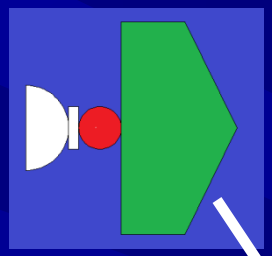

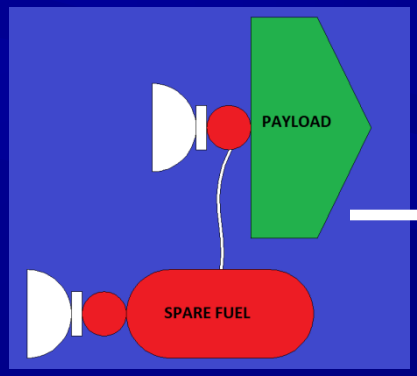

Flock Size	Payload	Spare Fuel	Primary Unit Fuel Use	ΔV
1 units	2000 lb	0 lb	150 lb	0.7 km/s
2 units	2000 lb	2000 lb	1200 lb	5.4 km/s
4 units	2000 lb	6000 lb	2250 lb	10.1 km/s

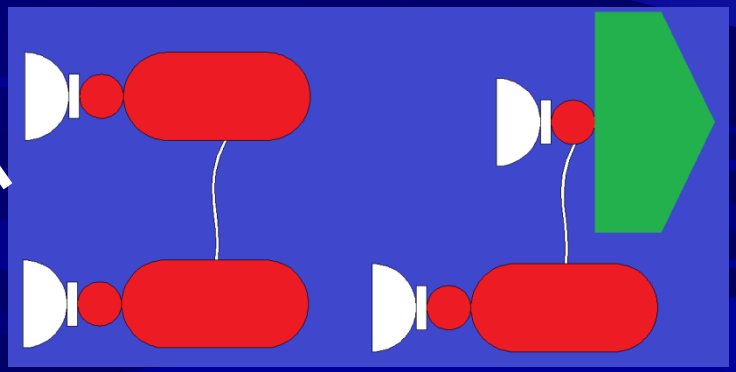

Mission done with fuel transfer and standard vehicles rather than 3 different custom vehicles.

Example 2: Cost of Baseline Anti-Matter Interstellar Rendezvous

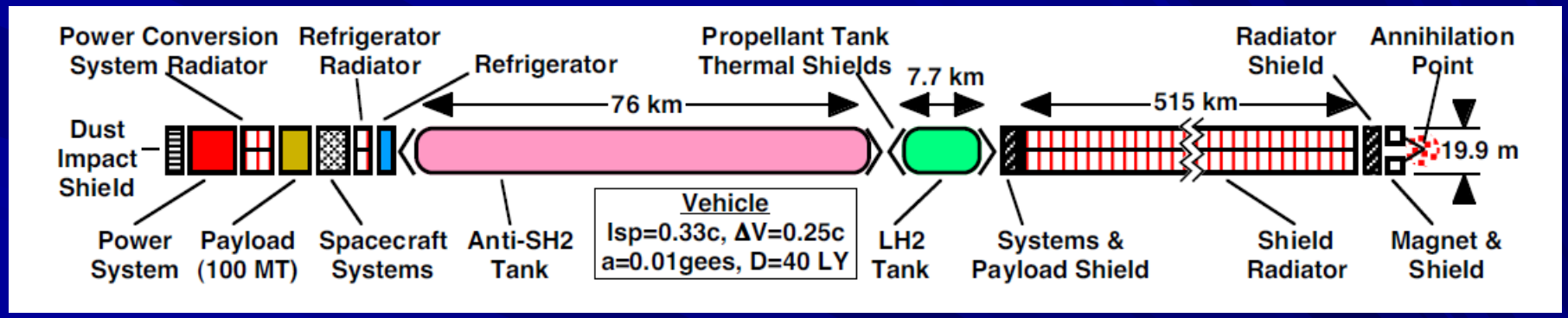

Frisbee's 'Stretch goal' anti-matter rocket design for 100MT payload & 1C ΔV

Stage	Dry Mass (MT)	Design Cost Estimate*	Hardware Cost Estimate*	Total Vehicle Cost Estimate*
4	16,492	3,628,240	90,706	3,718,946
3	199,294	21,922,340	1,096,117	23,018,457
2	1,802,387	198,262,570	9,913,128	208,175,698
1	14,811,107	1,629,221,770	81,461,088	1,710,682,858
Total	16,829,280	**1,853,034,920**	**92,561,039**	**1,945,595,959**

Example of a design where smaller units don't have propellant mass fraction penalty. Table data for 10x improved version. Costs in millions of FY2010 $.

Example 2: Cost of Flock Variation (4th Stage Replicated w/ Fuel Xsfer)

Unit Dry Mass (MT)	# of Units	Total Dry Mass (MT)	Design Cost Estimate	Hardware Cost Estimate	Total Cost Estimate
16,492	1030	16,986,760	3,628,240	93,427,180	97,055,420

System is a flock of 1030 units similar to previous 4th stage unit. Quantity includes 1% extra units to account for losses in flight. Costs in millions of FY2010 $.

Replacing 4 stage rocket with a cooperating flock reduces cost to develop and build initial prototype of fast interstellar rocket from approx. 2 quadrillion dollars (FY2010) to **less than 100 trillion dollars** (FY2010)!

* Assumes cost of 4th stage development & design as $100,000/lb and hardware costs as $2,500/lb based on historic data. Assumes 1st through 3rd stage development and design cost as only $50,000/lb due to component reuse from 4th stage development program. Cost for vehicle only. Fuel costs not included, though they may be significant.

Brainstorm Possible Implications of Mass Produced Flock Propulsion Units

How does this affect how we think of ambitious space missions?

What are other advantages/disadvantages of a spacecraft flock?

What sort of propulsion systems are good for small propulsion units?

What other technical challenges does the concept require overcoming?

What other technologies are there *synergies* with?

What have I not thought of yet?

Questions? Ideas?

Selected Bibliography

- Taylor, C.Y., “Economics of Separated Ascent Stage Launch Vehicles,” presented at the 42nd AIAA/ASME/SAE/ASEE Joint Propulsion Conference and Exhibit, AIAA-2006-4783, Sacramento, CA, 2006.
- Clapp, M. B., and Zubrin, R. M., “Black Horse:One Stop to Orbit,” Analog Science Fiction and Fact, June 1995, pp. 63-82.
- Goff, A., “The Flock Booster Architecture – Low Cost Access to LEO via Sustained Fueling,” presented at the 40th AIAA/ASME/SAE/ASEE Joint Propulsion Conference and Exhibit, AIAA-2004-3730, Ft. Lauderdale, FL, 2004.
- Goff, A., “FLOC Tradeoff Study – Minimizing Technical Risk with Zero-g Sustained Fueling,” presented at the 41st AIAA/ASME/SAE/ASEE Joint Propulsion Conference and Exhibit, AIAA-2005-32493, Tuscon, AZ, 2005.
- Griffin, M. D., and Claybaugh, W. R., “The Cost of Access to Space,” JBIS, Vol. 47, 1994, pp. 119-122
- Frisbee, R. H., “How to Build an Antimatter Rocket for Interstellar Missions,” presented at the 39th AIAA/ASME/SAE/ASEE Joint Propulsion Conference and Exhibit, AIAA-2003-4676 Huntsville, AL, 2003.
- Frisbee, R. H., “Impact of Interstellar Vehicle Acceleration and Cruise Velocity on Total Mission Mass and Trip Time,” presented at the 42nd AIAA/ASME/SAE/ASEE Joint Propulsion Conference & Exhibit, AIAA-2006-5224, Sacramento, CA
- Obousy, R. K. et. al., "Project Icarus: Progress Report on Technical Developments and Design Considerations," JBIS, Vol. 64, No.11/12 pp 358-371 (2011)
- Rocketcost.xls spreadsheet, Rev. L., Jupiter R&D LLC, Houston, TX, 2012.

For additional information contact:

Chris Y. Taylor
chrisytaylor@yahoo.com
Jupiter R&D LLC
Houston, TX