Deuterium-Tritium pulse propulsion with hydrogen as propellant and the entire space-craft as a gigavolt capacitor for ignition

F. Winterberg 2012

Summary

A deuterium-tritium (DT) nuclear pulse propulsion concept for fast interplanetary transport is proposed utilizing almost all the energy for thrust and without the need for a large radiator:

1. By letting the thermonuclear micro-explosion take place in the center of a liquid hydrogen sphere with the radius of the sphere large enough to slow down and absorb the neutrons of the DT fusion reaction, heating the hydrogen to a fully ionized plasma at a temperature of ~ 10^5 K.

2. By using the entire spacecraft as a magnetically insulated gigavolt capacitor, igniting the DT micro-explosion with an intense GeV ion beam discharging the gigavolt capacitor, possible if the space craft has the topology of a torus.

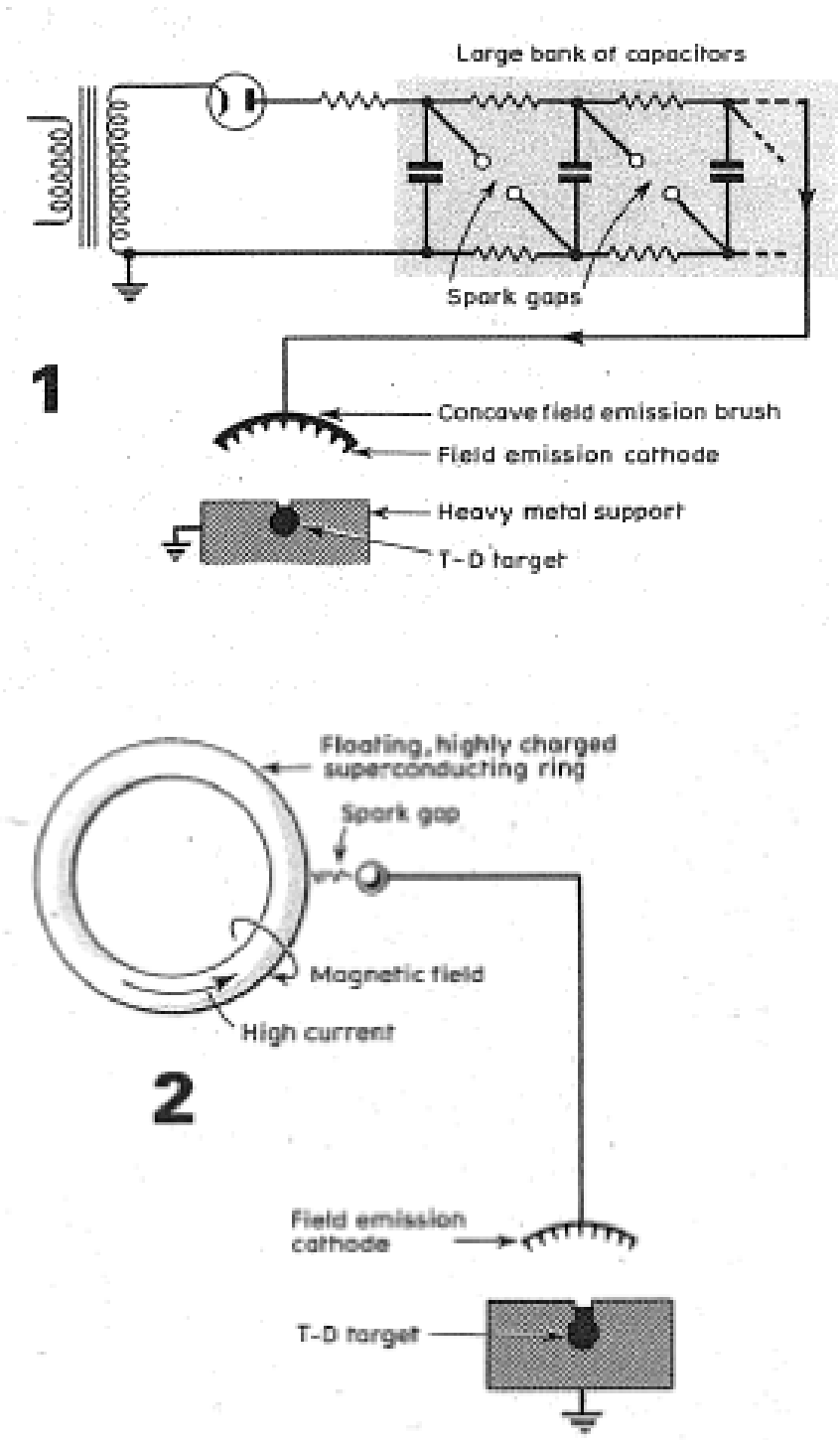

Figure 1

1. Bombardment of thermonuclear microexplosion target by electrons or ions from large Marx generator.

2. Bombardment of thermonuclear microexplosion target by ion beam from compact magnetically insulated torus charged to GeV potential.

(F. Winterberg Phys. Rev. **174** 212 (1968))

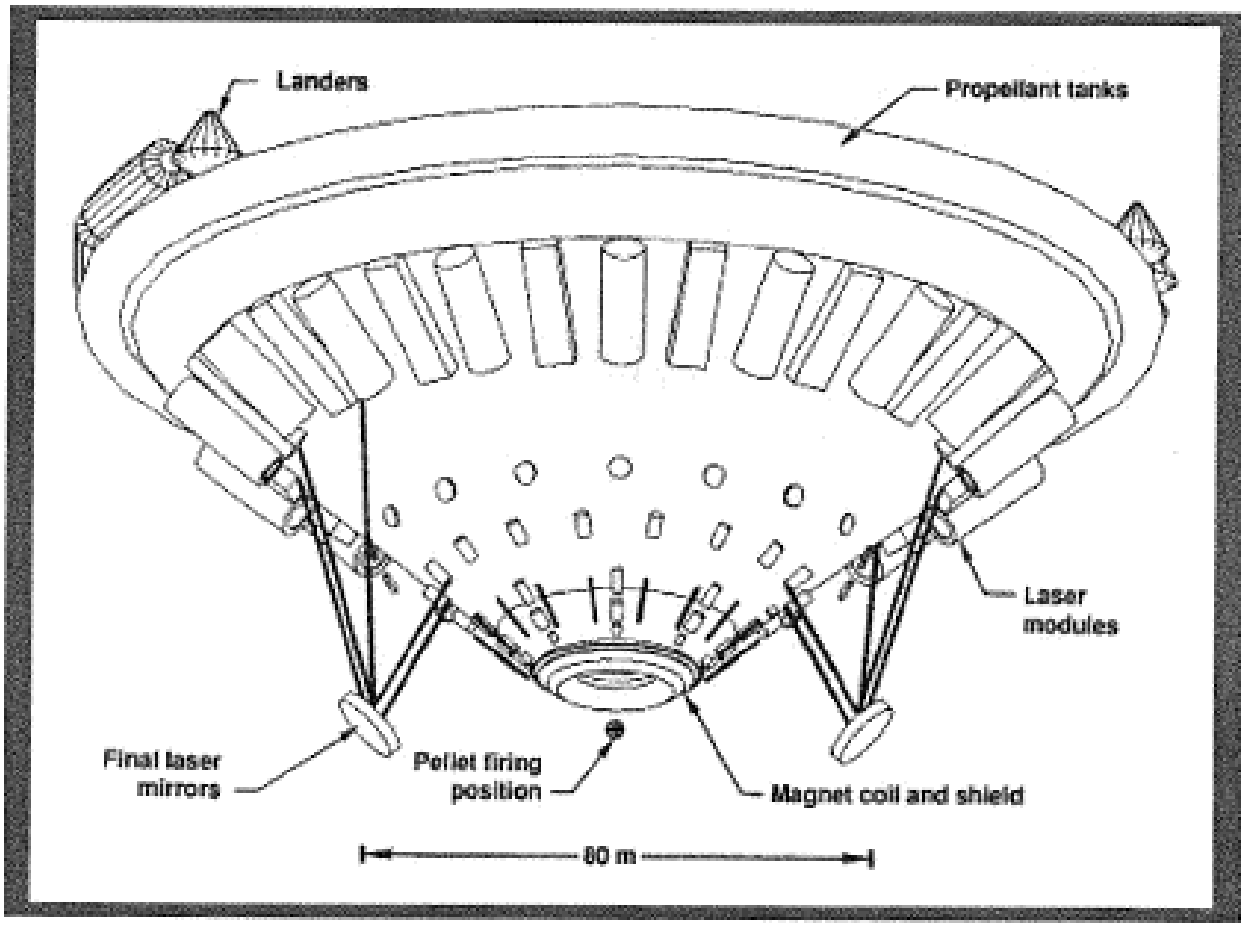

Figure 2

The Livermore VISTA concept needs large inefficient lasers, requiring a massive radiator to shed waste heat from the onboard power-plant that generates the laser beams.

(C.D. Orth, et al. Lawrence Livermore National Laboratory (2003))

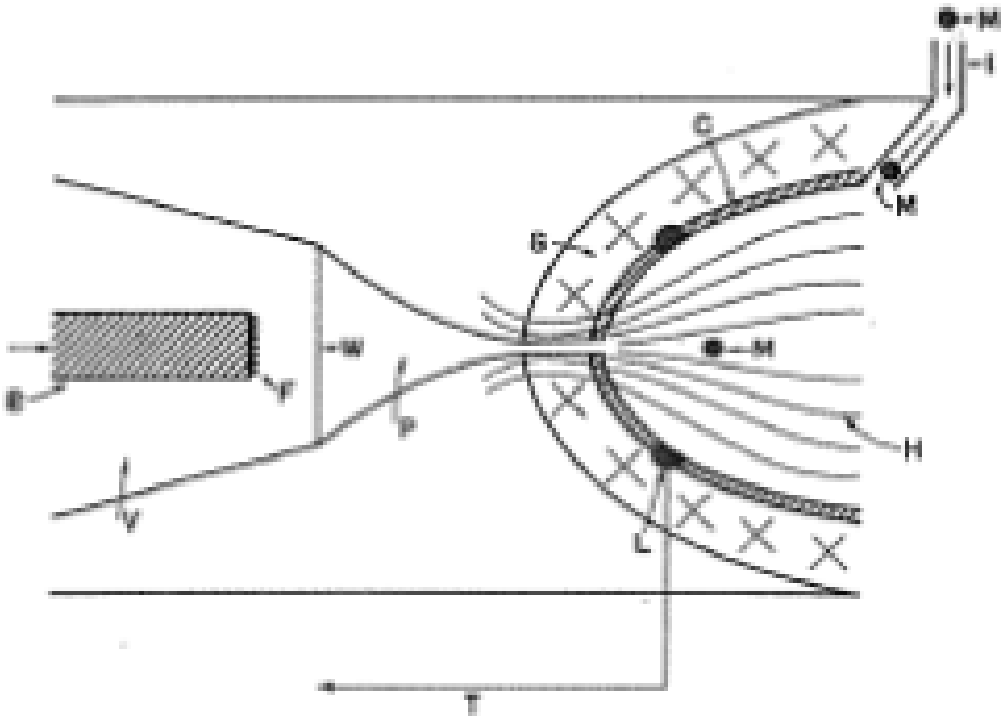

Figure 3

1971 concept by the author, can use the magnetically insulated torus as a compact ignitor.

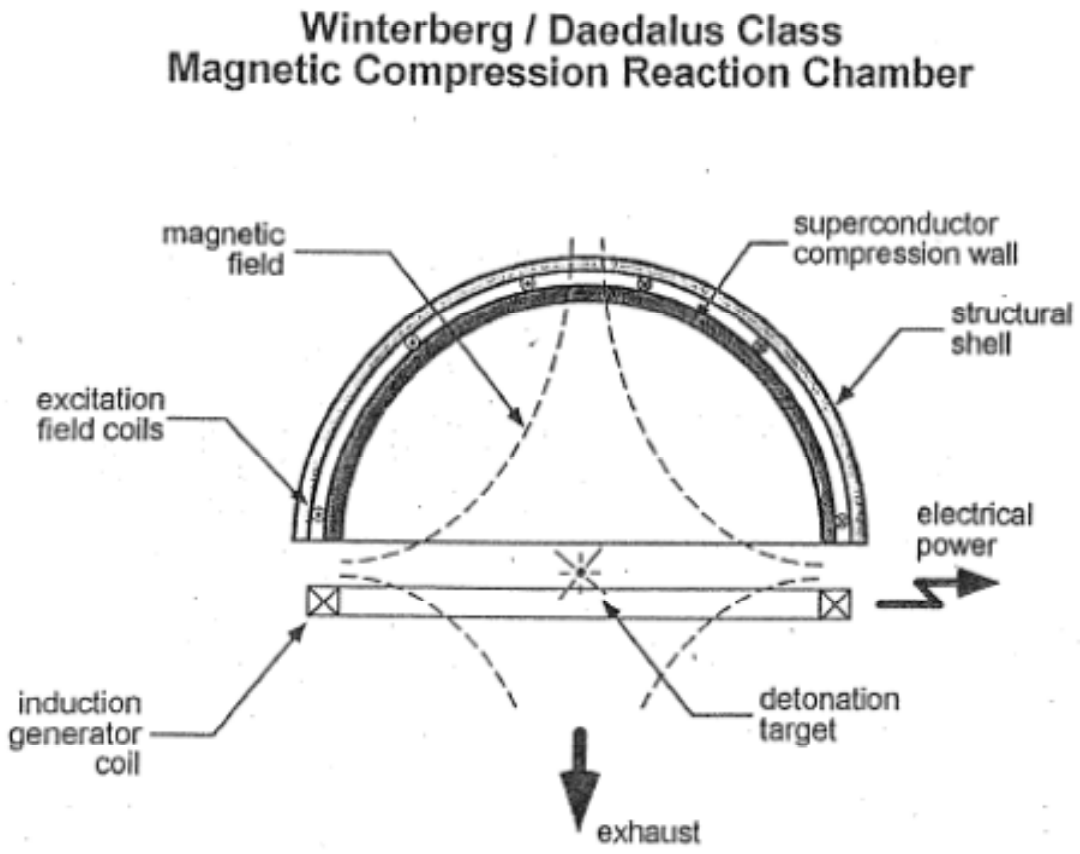

Figure 4

The same applies to the NASA concept developed by Hawke from the University of Huntsville, Alabama.

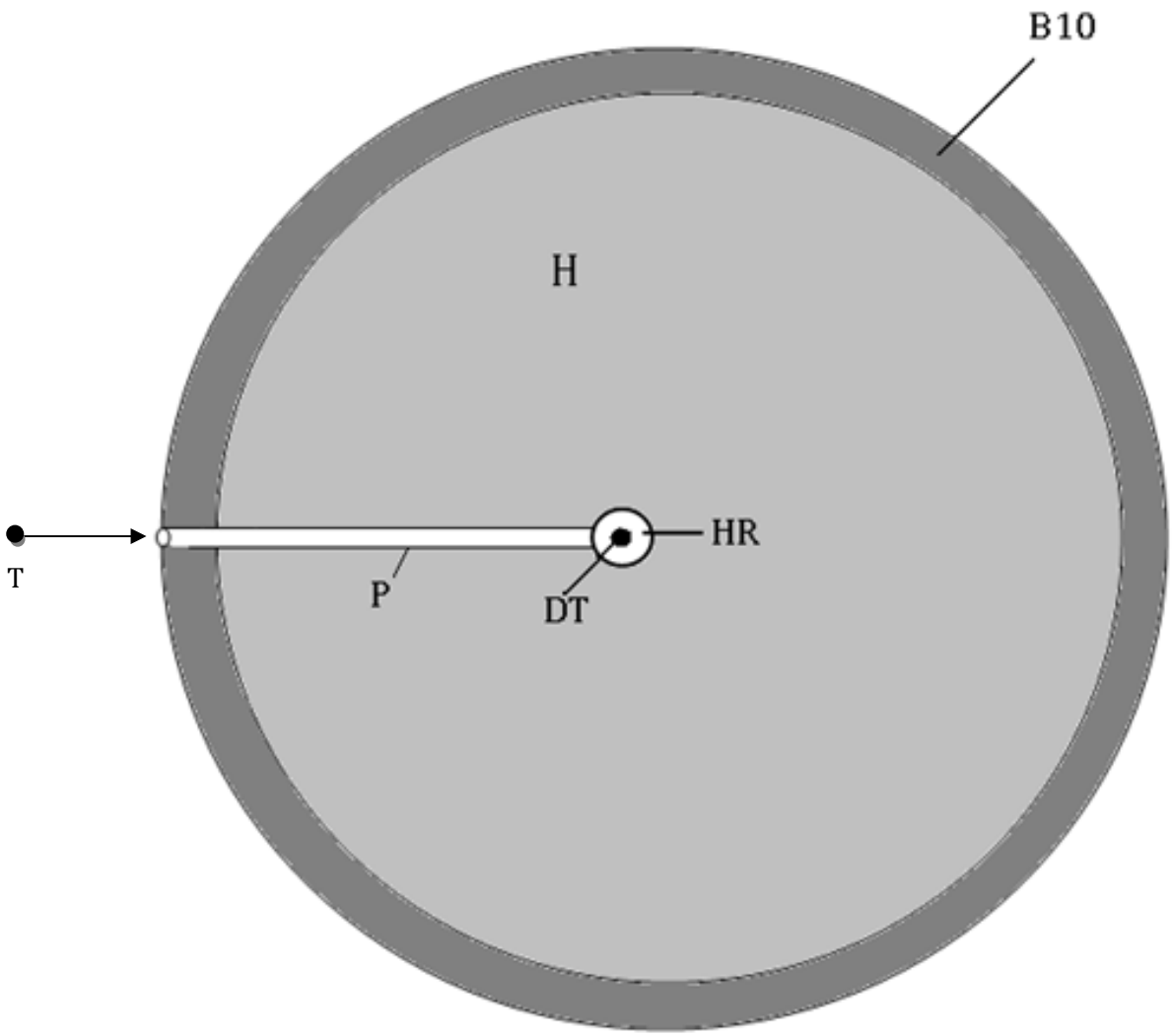

Figure 5

Turning to the DT deuterium-tritium fusion target T, a large radiator can be avoided by surrounding the DT target with liquid hydrogen ignited by a GeV ion beam drawn from a torus capacitor, with the target B catapulted through thin pipe P into the center of the sphere. H liquid hydrogen, B10 solid boron.

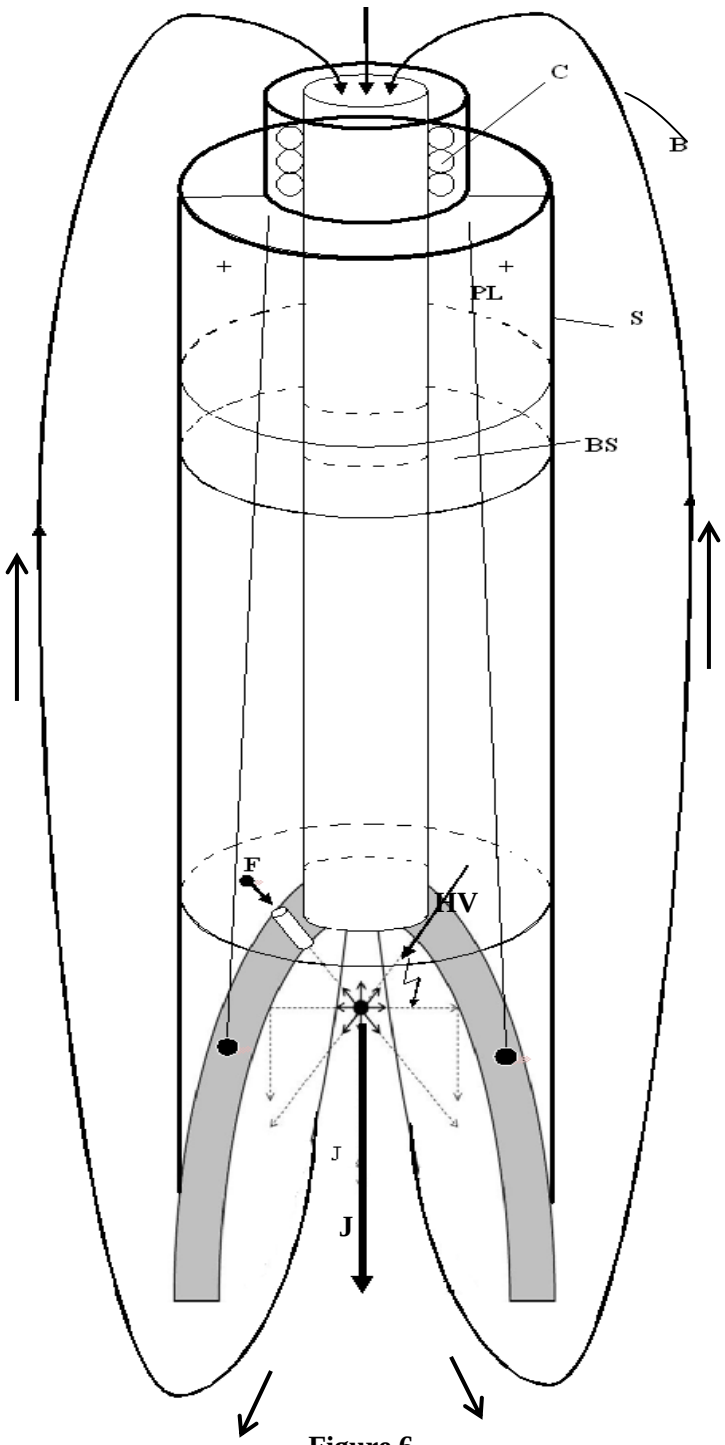

Figure 6

Deforming the torus leads to the configuration shown, with the spacecraft acting as large toroidal gigavolt capacitor to ignite thermonuclear micro explosion; F mini-fusion bomb assembly shot into focus of magnetic mirror, J plasma jet; HV GeV proton beam; B magnetic mirror field; BS biological shield; PL payload.

The spacecraft can reach gigavolt potentials by inductive charge injection into a rising toroidal magnetic field.

(F. Winterberg, Acta Astronautica **66** (2010) 40-44)

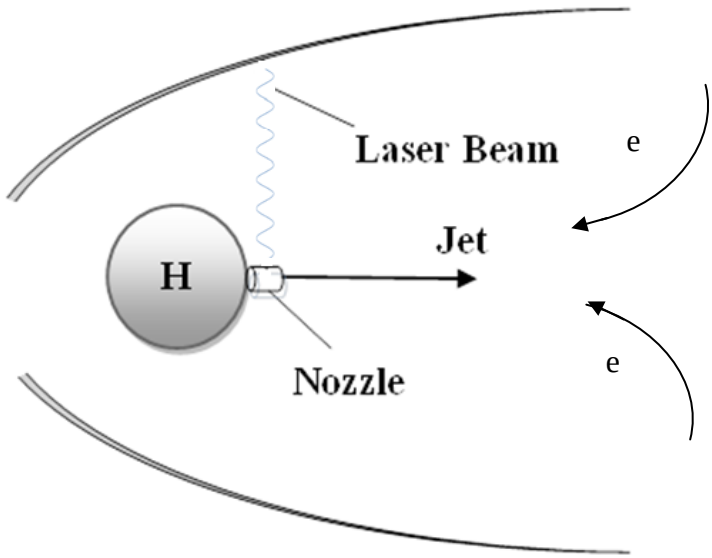

Figure 7

Grounding of the hydrogen sphere against the electron cloud surrounding the space-craft by a small laser driven jet; e electrons

References

1. F. Winterberg, Raumfahrtforschung, **15**, 208 (1971).

2. A.R. Martin et al., Project Daedalus,
   Journal of the British Interplanetary Society, supplement, Final Report, 1978

3. VISTA – C.D. Orth, UCRL-TR-110500, May 16, 2003.

4. G. Gaidos, R.A. Lewis and G.A. Smith,
   Pennsylvania State University, 1997.

5. F. Winterberg, Acta Astronautica **66**, 40 (2010)

6. S. Glasstone, Principles of Nuclear Reactor Engineering, D. Van Nostrand Co., Princeton, New Jersey, 1955.

7. Neutron Cross Sections, Brookhaven National Laboratory Report BNL 325, July 1, 1958, 2nd Ed.

8. F. Winterberg, "Isentropic focusing of supersonic plasma jets for magnetized target fusion," *Physics of Plasmas*, **9**, p. 3540, 2002.

9. F. Winterberg, Physical Review **174,** 212 (1968).

10. F. Winterberg, Proceeding of the International School of Physics "Enrico Fermi", "Physics of High Energy Density", Varenna, Italy, July 1969, p. 394, Academic Press, New York, 1971.